NW-미주향-AC 2010.6.83:45PM 페이지1 in

SAMSUNG

REFRIGERATOR

BOTTOM MOUNT FREEZER

BASIC : RB195AC/RB197AC/ RB215AC/RB217AC

MODEL NAME :

RB195ACRS	RB195ACBP
RB195ACWP	RB195ACPN
RB197ACRS	RB197ACBP
RB197ACWP	RB197ACPN
RB215ACRS	RB215ACBP
RB215ACWP	RB215ACPN
RB217ACRS	RB217ACBP
RB217ACWP	RB217ACPN

SERVICE *Manual*

REFRIGERATOR

CONTENTS

1. PRECAUTIONS(SAFETY WARNINGS)

2. PRODUCT SPECIFICATIONS

3. DISASSEMBLY AND REASSEMBLY

4. TROUBLESHOOTING

5. EXPLODED VIEW & PARTS LIST

6. PCB DIAGRAM

7. WIRING DIAGRAM

8. SCHEMATIC DIAGRAM

For the latest parts information, Please access to our service web site
(North America : http://service.samsungportal.com)

NW-미주향-AC 2010.6.83:45PM 페이지2 in

WARNING

IMPORTANT SAFETY NOTICE

The service guide is for service men with adequate backgrounds of electrical, electronic, and mechanical experience. Any attempt to repair a major appliance may result in personal injury and property damage. The manufacturer or dealer cannot be responsible for the interpretation of this information.

SAMSUNG ELECTRONICS AMERICA, INC.

Technical Service Guide

Copyright ©2010

All rights reserved. This service guide may not be reproduced in whole or in part in any form without written permission from the SAMSUNG ELECTRONICS Company.

Contents

1. PRECAUTIONS(SAFETY WARNINGS) · · ·

1. PRECAUTIONS(SAFETY WARNINGS)

- Due to the risk of electric shock, be sure to unplug the unit before servicing.
- Use the right electronic equipment for your new Refrigerator.
  - ⇨ Make sure to check out the right model name, rated voltage and current, operating temperature, etc.
- Upon repair, make sure that harnesses are not to be water-penetrated and are bundled tight.
  - ⇨ Should not be detached by a certain amount of external force.
- Upon repair, completely remove dust or other foreign substances from housing, harness, connector, etc.
  - ⇨ To prevent fire by tracking, short, etc.
- After repair, check out the assembled state of parts.
  - ⇨ It should be the same as the previous state.
- Check out the surrounding conditions.
  - ⇨ Change the location, if the fridge is located at humid, wet places or the installed state is unstable.
- If needed, ground the fridge.
  - ⇨ Especially, if there is a possibility of electric leakage, ground is indispensable.
- Do not allow consumers to overload a certain outlet.
- Check out whether the power cord or the outlet is broken, squeezed, chopped off or heat-deformed.
  - ⇨ Repair or replace the defective power cord/outlet immediately.
  - ⇨ Make sure the power cord is not punctuated or stomped down.
- Do not allow consumers to keep food unstable or place bottles in the Freezer Room.
- Do not allow consumers to repair the fridge for themselves.
- Do not allow consumers to keep things except for food.
  - ⇨ Pharmaceutical, Chemical substances : These are not possible to be fine-Controlled with a consumer fridge.
  - ⇨ Flammable material (alcohol, benzene, ether, LPG, etc) : possibility of explosion.

PRECAUTIONS(SAFETY WARNINGS)

Read all instructions before repairing the product and keep to the instructions in order to prevent danger or property damage.

CAUTION/WARNING SYMBOLS DISPLAYED

Warning	*Indicates that a danger of death or serious injury exists.*
Caution	*Indicates that a risk of personal injury or material damage exists.*

SYMBOLS

	means Prohibition".
	means Do not disassemble".
	means No contact".
	means The things to be followed".
	means Power cord should be unplugged from the consent"
	means Earth to prevent Electric shock".

Warning & Caution

Due to risk of electric shock, be sure to unplug the unit before servicing.

- *It may cause electric shock.*

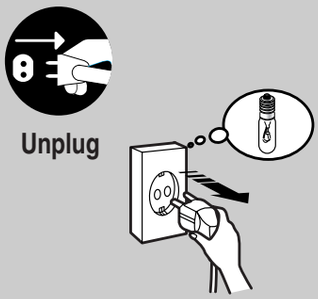

Use the rated components on the replacement.

- *Check the correct model, rated voltage, rated current, operating temperature and so on.*

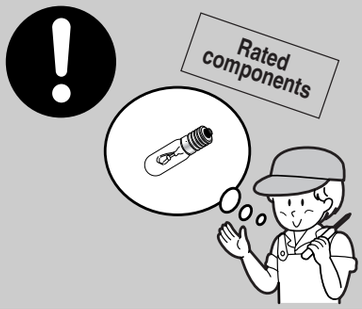

On repair, make sure that the wires such as harness are bundled tightly.

- *Bundle tightly wires in order not to be detached by the external force and then not to be wetted.*

On repair, remove completely dust or other things of housing parts, harness parts, and check parts.

- *Cleaning may prevent the possible fire by tracking or short.*

After repair, check the assembled state of components.

- *It must be in the same assembled state when compared with the state before disassembly.*

Check if there is any trace indicating the permeation of water.

- *If there is that kind of trace, change the related components or do the necessary treatment such as taping using the insulating tape.*

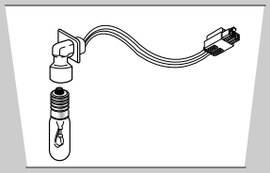

PRECAUTIONS(SAFETY WARNINGS)

❊ Please ler users know following warnings & cautions in detail.

Warning & Caution

Do not allow users to put bottles or kinds of glass in the freezer.

- *Freezing of the contents may inflict a wound.*

Do not allow users to store narrow and lengthy bottles or foods in a small multi-purpose room.

- *It may hurt you when refrigerator door is opened and closed resulting in falling stuff down.*

Do not allow users to store pharmaceutical products, scientific materials, etc., in the refrigerator.

- *The products which temperature control should not be stored in the refrigerator.*

Do not allow users to insert the power plugs for many products at the same time.

- *May cause abnormal generation of heat or fire.*

Do not allow users to disassemble, repair or alter.

- *It may cause fire or abnormal operation which leads to injury.*

Do not allow users to bend the power cord with excessive force or do not have the power cord pressed by heavy article.

- *May cause fire.*

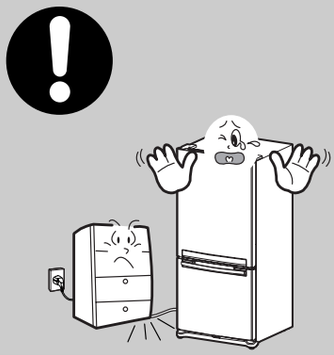

Do not allow users to store articles on the product.

- *Opening or closing the door may cause things to fall down, with may inflict a wound.*

Do not allow users to install the refrigerator in the wet place or the place which water splashes.

- *Deterioration of insulation of electric parts may cause electric shock or fire.*

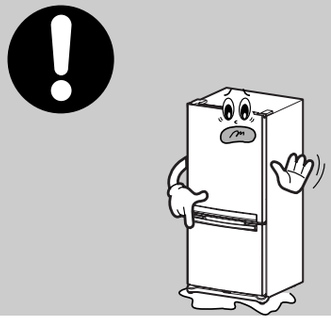

The Appliance must be properly grounded.

- *If earthing is not done, it will cause breakdown and electric shock.*

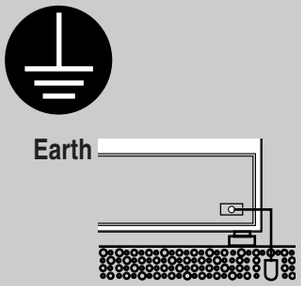

2. PRODUCT SPECIFICATIONS

2-1) Introduction of Main Function

- **A newly developed SAMSUNG bottom mount freezer in 2008 has the following characteristics.**

	Surround Multi Flow • Uniform cooling for each shelf and even in corner in fresh food compartment by center positioned fan and duct with multiple flow effluences.
	Twin Cooling System • The refrigerator and the freezer have two evaporators. Given this independent system, the freezer and the refrigerator are cooled individually as required and are, therefore, more efficient. Food odor from the refrigerator does not affect food in the freezer due to separate air flow circulation.
	Easy Handle System(RB197AC,RB217AC) • Ez-open Freezer Door • Ergonomic Door Design
	Moving Tray • The Deli Drawer can be moved side to side for customer improved customer satisfaction.
	Digital Display & Temperature Control • Digital Display & Temperature Control look and feel neat & clear design.

PRODUCT SPECIFICATIONS

2-2) Specifications

ELECTRICAL SPECIFICATIONS

Defrost Control ..... From 24 to 32 hrs
Thermo Bimetal Protector ..... 140°F(60℃)(off) 104°F(40℃)(on)
Defrost Thermistor(502AT) ..... R : 62.6°F(12℃) F : 57.2°F(14℃)
Electrical Rating ..... AC115V 60Hz 11.6 Amps
Maximum Current Leakage ..... 0.25 mA
Maximum Ground Path Resistance ..... 0.1 Ohm
Energy Consumption 450kWh/year

NO LOAD PERFORMANCE

Ambient Temperature	70°F(21℃)	90°F(32℃)
Refrigerator,°F	34°F(1℃)~46°F(8℃)	34°F(1℃)~46°F(8℃)
Freezer,°F	-14°F(-26℃)~8°F(-13℃)	-14°F(-26℃)~8°F(-13℃)
Run Time,%	<40	<60

REFRIGERATION SYSTEM

Refrigerant Charge ..... (R134a)5.64 oz(160g)
Compressor(MK162D-L1U) ..... 730 Btu/hr(0.124kw)
Compressor oil ..... Freol α 10c
R Capillary tube(Dia, Length) ... 0.032 " ,118 " (0.82mm,3000mm)
F Capillary tube(Dia, Length) .... 0.032 " ,118 " (0.82mm,3000mm)

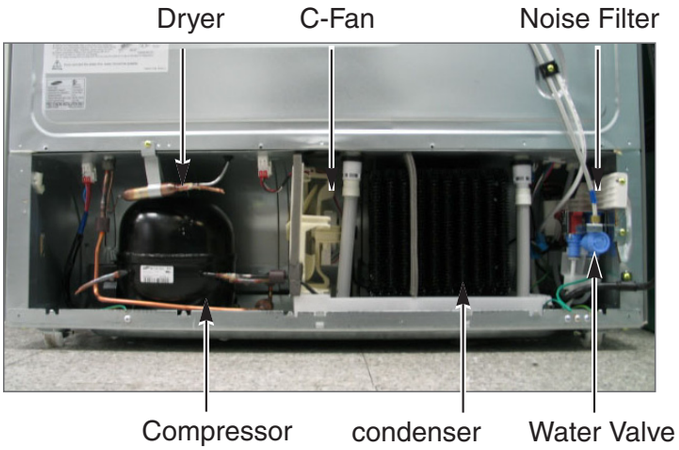

INSTALLATION

Clearance must be provided for air circulation
AT TOP ..... 2 " (50mm)
AT SIDES ..... 1 " (25mm)
AT REAR ..... 2 " (50mm)

Refrigerator

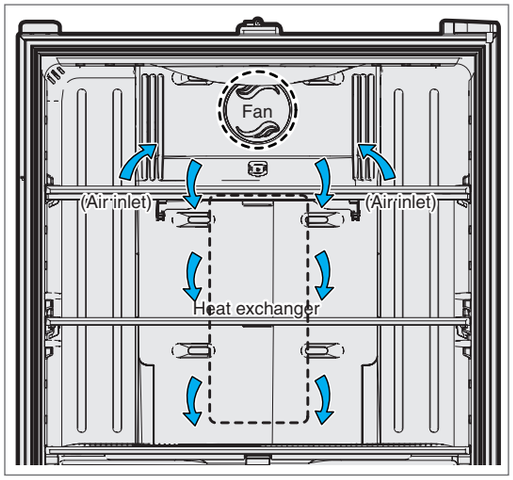

Freezer

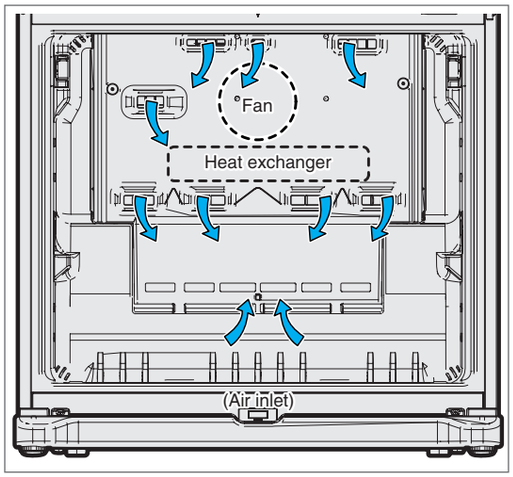

PRODUCT SPECIFICATIONS

2-3) Interior Views

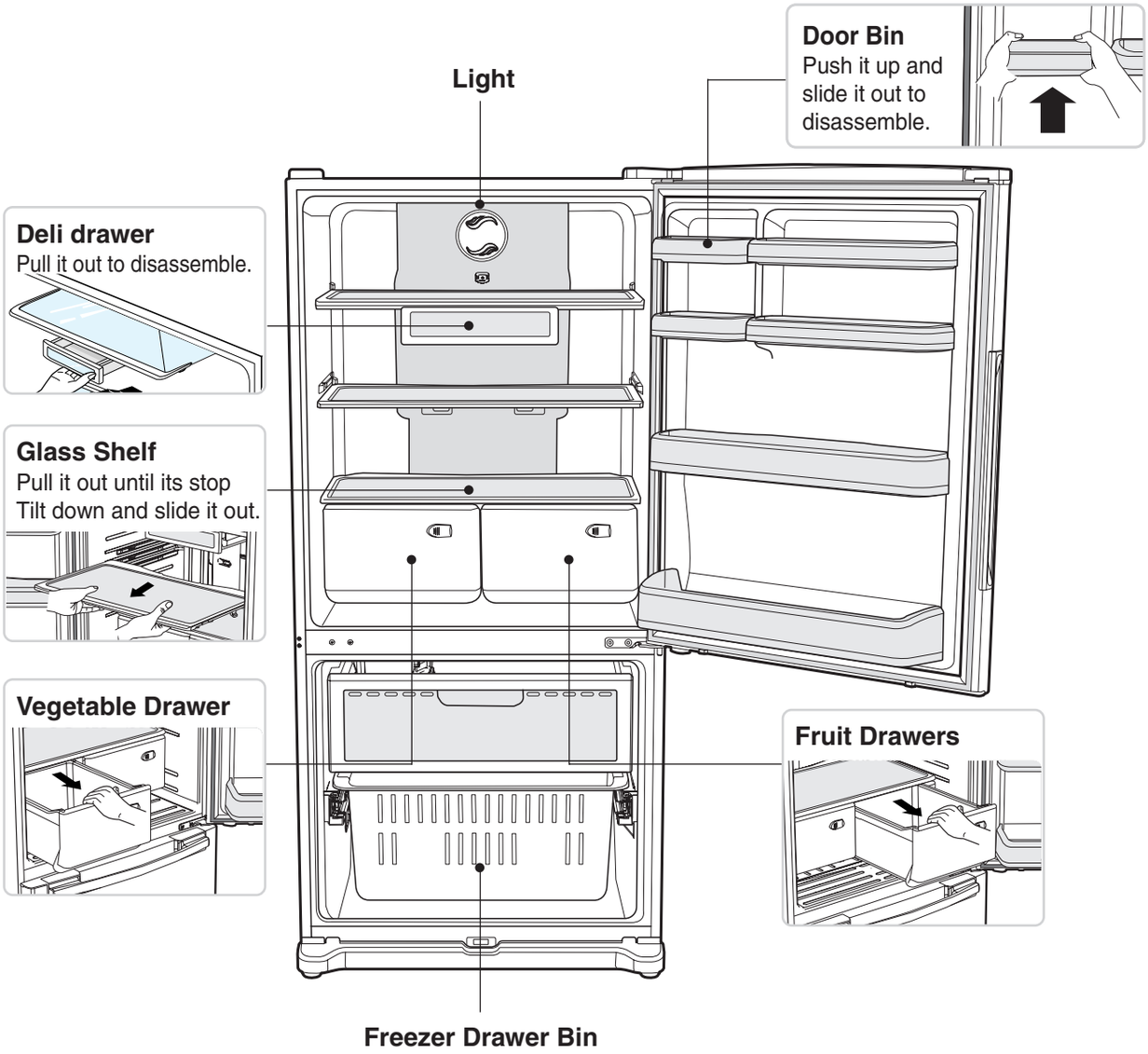

PRODUCT SPECIFICATIONS

2-4) Model Specification

ITEM			SPEC	SAMSUNG
				RB195, RB197, RB215, RB217
Appearance				
Product Zone			Cooling Tech	Twin Cooling
			Door Shape	Contour
			Special Room	Cool Select Pantry
Performance	Cooling Speed(Min)	F-Room	220 ↓	177.7
		R-Room	220 ↓	162.6
	89.6°F(32°C)	F-Room	-26.0 ↓	-28.6
		R-Room	2.0 ↓	-0.4
	109.4°F(43°C)	F-Room	-18.0 ↓	-22
		R-Room	5.0 ↓	0.4
	Temperature Distribution (Fridge)	F-Room	2.0 ↓	0.5
		R-Room	2.0 ↓	1.3
	Run Time	N-N	65% ↓	53.6
Noise	Sound power level		46dB ↓	43.5
	Sound Pressure level		45dB ↓	48.2

PRODUCT SPECIFICATIONS

2-5) Model Specification & Specification Chart

Free Standing Model			Swing/No Dispenser	Swing/External Water Dispenser	Swing /No Dispenser	Swing/ External Water Dispenser
Model Number/ BOM code			2 Door		2 Door	
			RB195	RB197	RB215	RB217
Dimension (WxDxH)Inch/mm			32 1/4 x28 1/4 x70(817x715x1778)	32 1/4 x28 1/4 x70(817x715x1778)	32 1/4 x230 1/4 x70(817x765x1778)	32 1/4 x230 1/4 x70(817x765x1778)
Capacity (net) (cu.ft/l)	Total		(18.7 / 529.5)	(18.7 / 529.5)	(20.5 / 579.7)	(20.5 / 579.7)
	Refrigerator		(5.9 / 167)	(5.9 / 167)	(6.5 / 184.1)	(6.5 / 184.1)
	Freezer		(12.8 / 362.5)	(12.8 / 362.5)	(14.0 / 395.6)	(14.0 / 395.6)
Dimension (Net : Inch/mm)	Width		32 1/4 / 817	32 1/4 / 817	32 1/4 / 817	32 1/4 / 817
	Height	w/o Hinge	68 3/4 / 1748	68 3/4 / 1748	68 3/4 / 1748	68 3/4 / 1748
		With Hinge	70 /1778	70 /1778	70 /1778	70 /1778
	Depth	with Handle	28 1/4 / 715	28 1/4 / 715	30 1/8 / 765	30 1/8 / 765
		w/o Handle	28 1/4 / 715	28 1/4 / 715	30 1/8 / 765	30 1/8 / 765
		w/o Door	24 3/4 / 628	24 3/4 / 628	26 3/4 / 678	26 3/4 / 678
Dimension (packing : Inch)	Width		34 / 865	34 / 865	34 / 865	34 / 865
	Net		72 1/8 / 1832	72 1/8 / 1832	72 1/8 / 1832	72 1/8 / 1832
	Packing		30 1/8 / 766	30 1/8 / 766	32 1/8 / 816	32 1/8 / 816
Weight (lb)	Height		216lb (98kg)	216lb (98kg)	225lb (102kg)	225lb (102kg)
	Depth		247lb (112kg)	247lb (112kg)	256lb (116kg)	256lb (116kg)
Compressor			Reciprocate			
Rated Frequency and Frequency			AC 115V/60Hz			
Refrigerant			R 134a			
Foaming Agent			C-Pentane			
Refrigerant Input Amount			5.64 oz (160g)			
Type Refrigerator			Indirect Cooling Method Refrigerator			
Motor Rated Consumption Power			140W			
Electric Heater Rated Consumption Power			340W			

COLOR			
	Cabinet (Both Side)	Door	Molding
Black	All Black	Empire Black	I Black
Real STS	Noble STS	Versailles Stainless	Creamy STS
White	Snow White	Snow White	Snow White
Platinum STS	Noble STS	Stainless Platinum	Creamy STS

PRODUCT SPECIFICATIONS

Items				Specification	
Model				RB19*,RB21*	
Components for Freezer	Compressor		Model	MK162DLIU-E09	
			Starting type	AC	
			Oil Charge	FREOL α-10	
	Evaporator		Freezer	SPLIT FIN TYPE	
			Refrigerator	SPLIT FIN TYPE	
	Condenser			Forced and Natural Convection Type	
	Dryer			Molecular shieve XH-9	
	Capillary tube(Dia x Length)			R : 0.032" x 118" (0.82mm x 3000mm) / F : 0.032" x 118" (0.82mm x 3000mm)	
	Refrigerant			R134a	
Room Temperature Sensor Components	Freezer	Model	Temperature Selection	ON(℉)	OFF(℉)
		THERMISTOR (F-SENSOR) 502AT	-14℉(-26℃)	-11℉(-24℃)	-17℉(-27℃)
			-2℉(-19℃)	1℉(-17℃)	-5℉(-21℃)
			8℉(-13℃)	11℉(-12℃)	5℉(-15℃)
	Refrigerator	Model	Temperature Selection	ON(℉)	OFF(℉)
		THERMISTOR (R-SENSOR) 502AT	34℉(1℃)	36℉(2℃)	32℉(0℃)
			38℉(3℃)	40℉(4℃)	36℉(2℃)
			46℉(8℃)	48℉(9℃)	44℉(7℃)
Defrost Related Components	Defrost Cycle	First Defrost Cycle (Concurrent defrost of F and R)		6hr ±10min	
		Defrost Cycle(FRE)		12~23hr(vary according to the conditions used)	
		Defrost Cycle(REF)		6~11hr(vary according to the conditions used)	
		Pause time		12 ±1min	
	Defrost Sensor	F Defrost-Sensor	Model	THERMISTOR (502AT)	
			SPEC	5.0 KΩ at 77℉(25℃)	
		R Defrost-Sensor	Model	THERMISTOR (502AT)	
			SPEC	5.0 KΩ at 77℉(25℃)	
	Bimetal	F Bimetal-thermo Protector	Rated	AC 125V 10A	
			Operating temperature	Off : 140℉(60℃) / On : 104℉(40℃)	
		R Bimetal-thermo Protector	Rated	AC 125V 10A	
			Operating temperature	Off : 140℉(60℃) / On : 104℉(40℃)	

PRODUCT SPECIFICATIONS

Items			Specification
Model			RB19*,RB21*
Electric Components	Defrost Heater(FRE)	Heated at F Defrost	AC 120V, 240W
	Defrost Heater(REF)	Heated at R Defrost	AC115V, 120W
	Over Load Relay	Model	4TM412SFBYY-53
		Temp.ON	275 ± 41°F(135±5°C)
		Temp.OFF	141.8 ± 61°F(61±9°C)
	Rated Voltage		AC 115V/ 60Hz
	Motor-BLDC(FRE)		DC12V / DREP5020LC
	Motor-BLDC(REF)		DC12V / DREP5020LC
	Motor-BLDC(CIRCUIT)		DC12V / DREP5130LA
	Lamp(FRE)		DC12V / 100mA~140mA(1EA)
	Lamp(REF)		DC12V / 260mA~340mA(1EA)
	Door Switch	FRE	DC200V 0.5A / MS-406-SS-01(1EA)
		REF	DC200V 0.5A / MS-406-SS-01(1EA)
	Power Cord		AC125V 15A
	Ground Screw		BSBN (BRASS SCREW)

PRODUCT SPECIFICATIONS

2-6)Dimensions of Refrigerator (Inches)

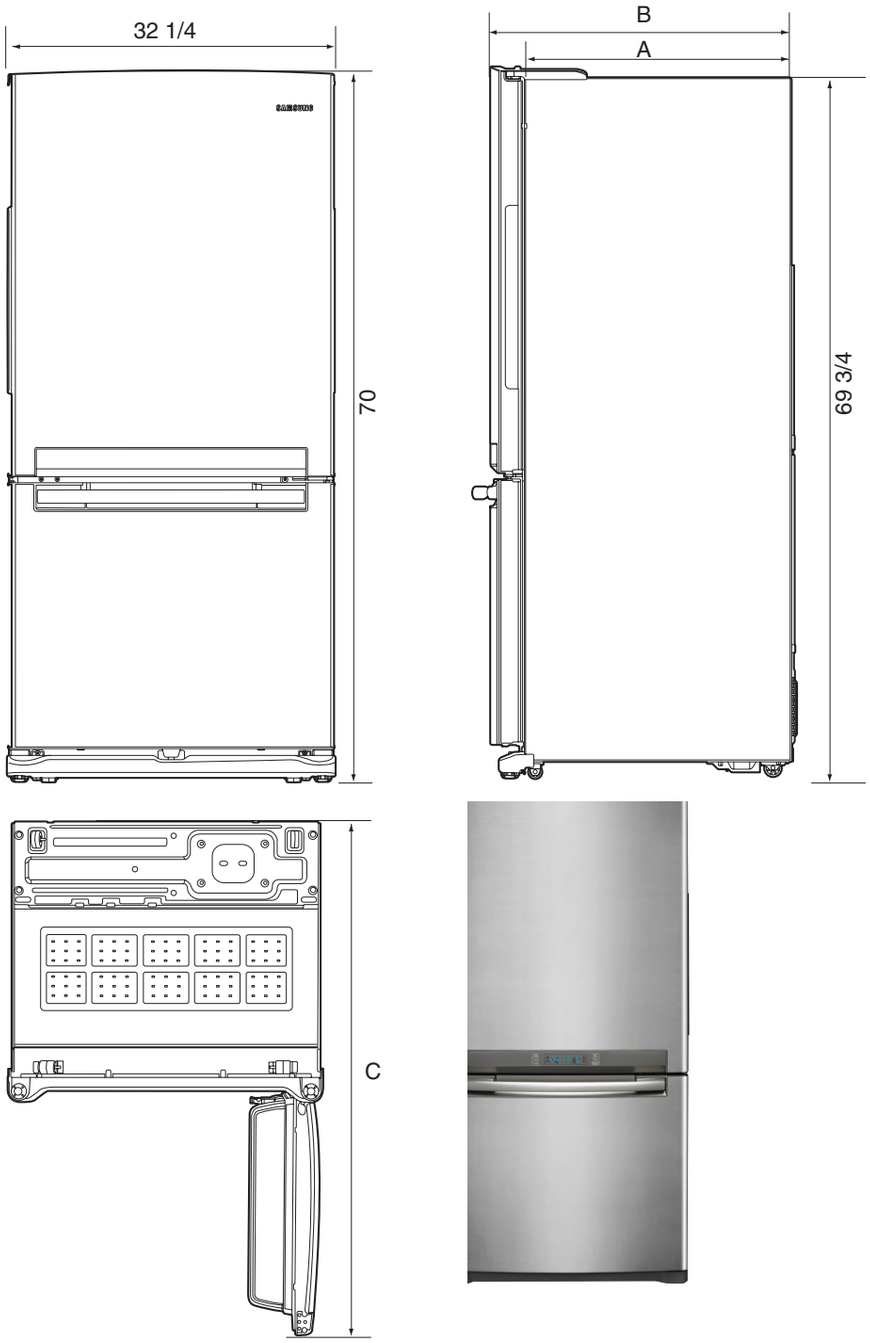

MODEL	A	B	C
RB19*	24 1/4	27 5/8	57 1/2
RB21*	26 1/4	29 5/8	59 1/2

PRODUCT SPECIFICATIONS

2-7) Refrigerant Route in Refrigeration cycle

Compressor → Sub-condenser → Side Cluster → Hot Pipe → Dryer → R Capillary → R Evaporator → F Evaporator → Suction Pipe → Compressor

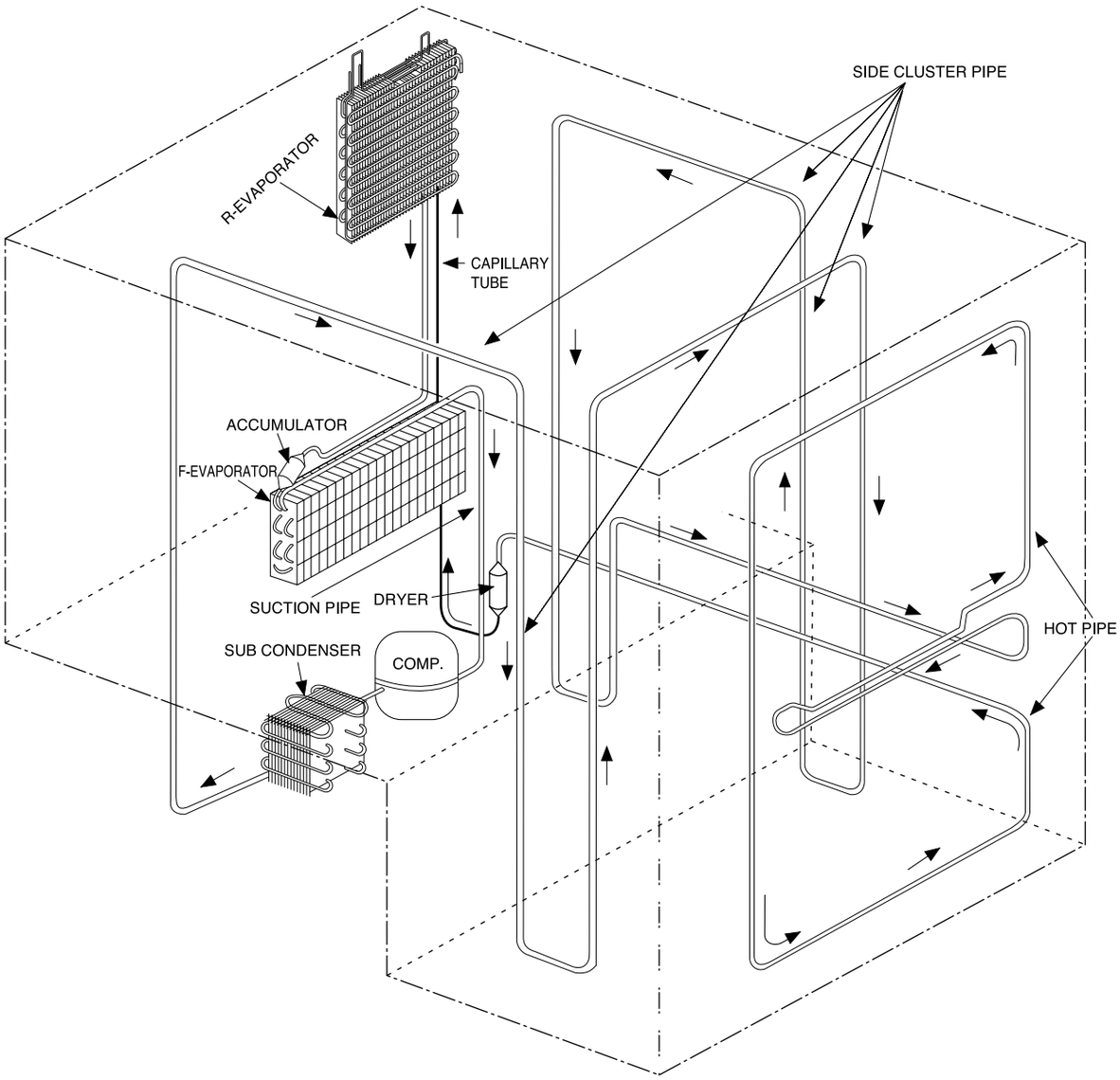

PRODUCT SPECIFICATIONS

2-8) Cooling Air Circulation

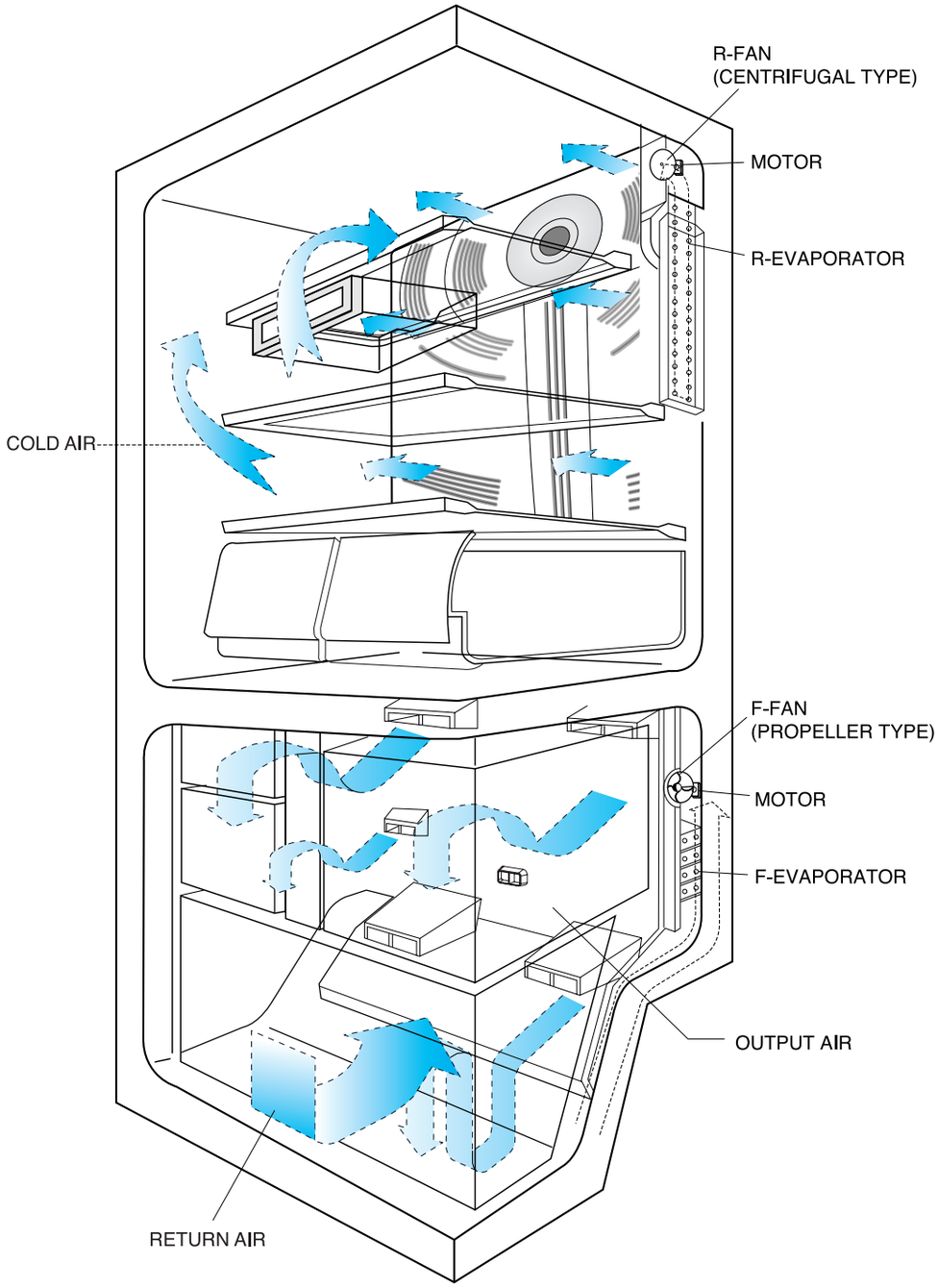

3. DISASSEMBLY AND REASSEMBLY

3-1) PRECAUTION

- Unplug the refrigerator before cleaning and making repairs.
- Do not dissemble or repair the refrigerator by yourself.
  - It may cause risk of causing a fire, malfunction and/or personal injury.
- Remove any foreign matter or dust from the power plug pins.
  - Otherwise there is a risk of fire.
- Do not use a cord that shows cracks or abrasion damage along its length or at either end.
- Do not plug several appliances into the same multiple power board. The refrigerator should always be plugged into its own individual electrical which has a voltage rating that matched the rating plate.
  - This provides the best performance and also prevents overloading house wiring circuits, which could cause a fire hazard from overheated wires.
- Do not install the refrigerator in a damp place or place where it may come in contact with water.
  - Deteriorated insulation of electrical parts may cause an electric shock or fire.
- The refrigerator must be grounded.
  - You must ground the refrigerator to prevent any power leakages or electric shocks caused by current leakage from the refrigerator.
- Do not put bottles or glass containers in the freezer.
  - When the contents freeze, the glass may break and cause personal injury.
- Do not store volatile or flammable substances in the refrigerator.
  - The storage of benzene, thinner, alcohol, ether, LP gas and other such products may cause explosions.

- Required Tools

IMAGE	ITEM	USE
	Phillips Head Driver	Use for assembling and disassembling of screw
	Flat Head Driver	Use for assembling and disassembling of HomeBar, Dispenser, Deli Cartessen Box, Main PBA etc...
	Hex Wrench ø 2mm	Use for assembling and disassembling of Handle
	Socket Wrench ø 10mm	Use for assembling and disassembling of Door Hinge

DISASSEMBLY AND REASSEMBLY

3-2) Refrigerator Door

Part Name	How To Do	Descriptive Picture
Refrigerator Door	1. After removing the screw, disassemble the Upper Right Hinge Cover with opening door.	
	2. Disconnect electric wire on the top of the refrigerator.	
	3. With the 7/16 inch wrench, remove the three bolts that holds the hinge on the top of the refrigerator.	
	4. Remove the screw that hold the ground wire.	
	5. Separate Hinge from electric wire and ground wire as shown in the picture.	

DISASSEMBLY AND REASSEMBLY

Part Name	How To Do	Descriptive Picture
Refrigerator Door	6. Disassemble the fridge door by lifting it upward. Be careful not to drop and scratch the fridge door.	
	7. Separate the Cap assembled on the Middle Hinge.	

3-3) Freezer Door(RB215,RB195)

Part Name	How To Do	Descriptive Picture
Freezer Door	1. After removing the screw and 2 special screws, disassemble Middle Hinge.	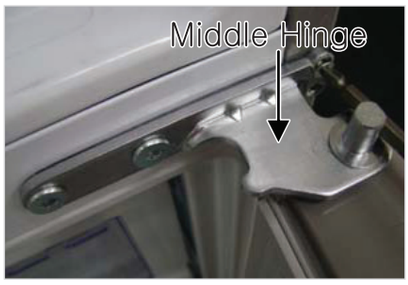

DISASSEMBLY AND REASSEMBLY

3-3) Freezer Door(RB215,RB195)

Part Name	How To Do	Descriptive Picture
Freezer Door	2. Remove the Middle Hinge connected to the Freezer.	
	3. Disassemble the Freezer door by lifting it upward. Be careful not to drop and scratch the Freezer door	
	4. Disassemble the Cap on the Low Hinge.	

3-3) Freezer Door(RB217AC,RB197AC)

Part Name	How To Do	Descriptive Picture
Freezer Door	1. After opening the Freezer door, separate drawer box	

DISASSEMBLY AND REASSEMBLY

Part Name	How To Do	Descriptive Picture
Freezer Door	2. With the 7/16 inch wrench, remove the each two bolts connecting rail with door.	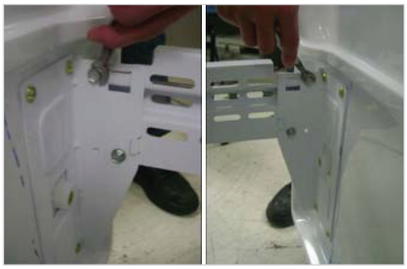
	3. Disassemble the Freezer door from the rails.	

3-4) Freezer Door Switch

Part Name	How To Do	Descriptive Picture
Freezer Door Switch	1. Remove 1 screw at the lower part of the Freezer.	
	2. Separate the Cap.	
	3. Separate the Housing.	

DISASSEMBLY AND REASSEMBLY

3-5) Refrigerator Light

Part Name	How To Do	Descriptive Picture
Refrigerator Light	1. Remove the lamp cover by pulling it down as pushing the rear of lamp cover.	
	2. Separate the LED panel.	
	3. Remove the LED panel by lifting the left part of LED panel while pushing it to right. (Refer to pictrue)	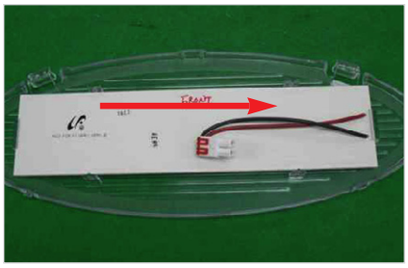

3-6) Glass shelves

Part Name	How To Do	Descriptive Picture
Glass shelves	1. When pulling out the shelf, if it is not slid out well, lift it up slightly and pull out again.	

DISASSEMBLY AND REASSEMBLY

3-7) Moving tray

Part Name	How To Do	Descriptive Picture
Moving tray	1. When pulling out the Moving tray, if it is not slid out well, lift it up slightly and pull out again.	

3-8) Vegetable & Fruit Drawers Shelf

Part Name	How To Do	Descriptive Picture
Vegetable & Fruit Drawers Shelf	1. Remove the vegetable & fruit drawer by pulling the roller part and lifting it up.	
	2. Remove the vegetable & fruit drawer shelf by pulling it out. (Refer to the picture)	
	3. Remove the vegetable & fruit drawer partition by pulling it out. (Refer to the picture)	

DISASSEMBLY AND REASSEMBLY

3-9) Gallon Door Bin

Part Name	How To Do	Descriptive Picture
Gallon Door Bin	1. Remove the gallon door bin by lifting it up. (Refer to the picture)	

3-10) Evaporator In Refrigerator

Part Name	How To Do	Descriptive Picture
Evaporator In Refrigerator	1. Remove the screw cap with a flat-blade screwdriver.	
	2. Unscrew a screw.	
	3. Unscrew two screws. And remove the hook by pulling it from the lower part and pushing the cover down. (Refer to the picture)	

DISASSEMBLY AND REASSEMBLY

Part Name	How To Do	Descriptive Picture
Evaporator In Refrigerator	4. Remove the housing cover by pushing both lateral sides of the housing cover and pulling it out. (Refer to the picture)	
	5. Disconnect the housing connector part. (Refer to the picture)	
	6. Remove the evaporator by Lifting the bottom side of it up and pulling it out. (Refer to the picture)	

DISASSEMBLY AND REASSEMBLY

3-11) Door Handle Freezer

Part Name	How To Do	Descriptive Picture
Door Handle Freezer	1. Remove the Cap Door with a flat-blade(-) screwdriver.	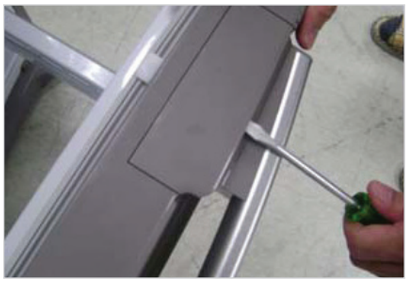
	2. Lift the handle up with force in the direction of arrow.	

3-12) Freezer Light

Part Name	How To Do	Descriptive Picture
Freezer Light	1. Remove the lamp cover by pushing the hook of lamp cover.	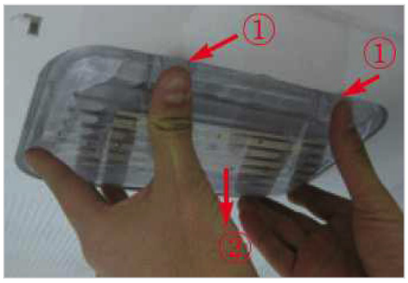
	2. Remove the LED panel by lifting the left part of LED panel while pushing it to right. (Refer to pictrue)	

DISASSEMBLY AND REASSEMBLY

3-13) Evaporator Cover In Freezer

Part Name	How To Do	Descriptive Picture
Evaporator Cover In Freezer	1. Remove the freezer door and freezer drawer by pulling out the drawer and then unscrewing 2 screws. Lift up the evaporator cover.	
	2. Disengage the housing connector and remove the evaporator cover.	

3-14) Evaporator InFreezer

Part Name	How To Do	Descriptive Picture
Evaporator In Freezer	1. Remove the housing cover by pushing both lateral sides of housing cover part and pulling it out. Remove the housing connector part.	
	2. Remove the evaporator by pulling the lower part of the evaporator while lifting it up.	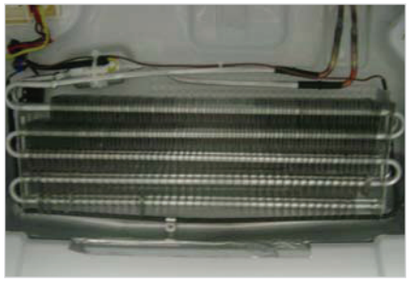

DISASSEMBLY AND REASSEMBLY

3-15) Motor Fan

Part Name	How To Do	Descriptive Picture
Motor Fan	1. Unscrew 5 screws of cover compressor.	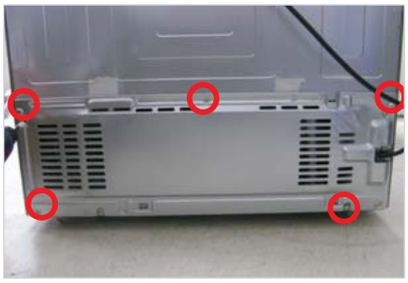
	2. Disengage the housing connector. (Refer to the picture)	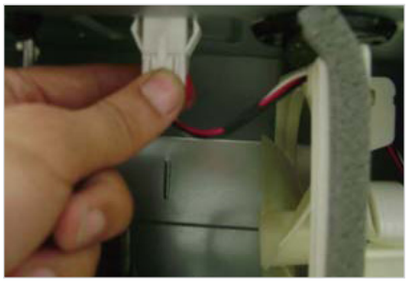
	3. Remove the hooker of support circuit motor by lifting the hooker up and pulling it out.	
	4. Remove the screw with a flat-blade screwdriver. (Refer to the picture)	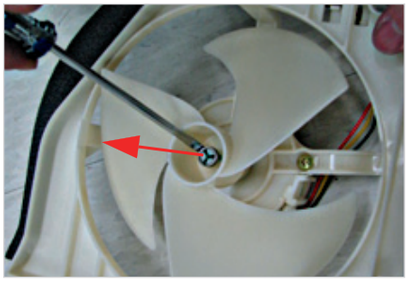
	5. Remove the motor fan by pulling the fan out while graping the motor part.(Refer to the picture)	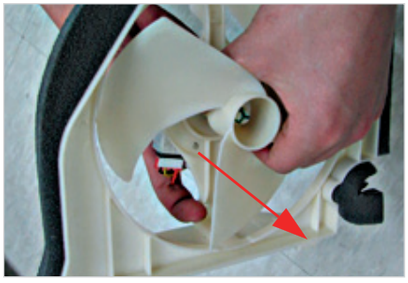

DISASSEMBLY AND REASSEMBLY

Part Name	How To Do	Descriptive Picture
Motor Fan	6. Unscrew 2 screws fixed in the motor.	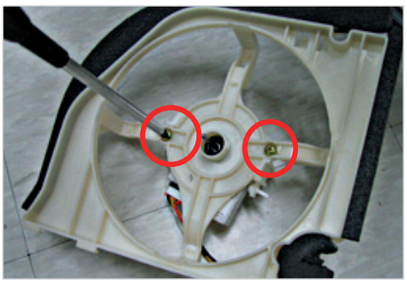
	7. Remove the hook of the motor cover with a flat-blade (-) screwdriver and then remove the motor.	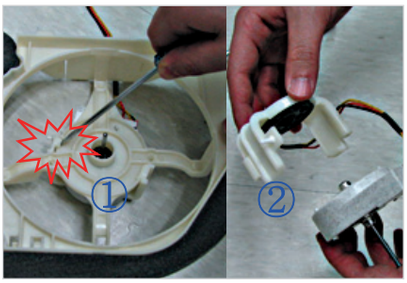

4. TROUBLESHOOTING

4-1) Check items before failure diagnosis

4-1-1. TEST mode (Manual operation / Manual defrost function)

- If the Power Freeze and Fridge Key on the front panel are pressed simultaneously for 8 seconds, it will be changed to the Test Mode and all display on the front panel will be off.
- If any key on the front panel is pressed within 15 seconds after changing to Test Mode, it will be operated as below sequence; Manual operation (FF) → Manual defrost of R (rd) → Manual defrost of F/R (Fd) → Cancel (Display all off).
- If any key on the front of panel is not pressed within 15 seconds after the Test Mode, the Test Mode will be canceled and it will be returned to previous mode.

1) Manual operation function

① If **Power Freeze Key + Fridge Key are pressed simultaneously for 8 seconds and all displays are off,** it will be changed to the Test Mode (manual operation) pressing any key.

1-1) If any key is pressed once in TEST MODE, "FF" blinks on the display and it indicates the refrigerator has entered the manual operation. At this moment, buzzer beeps as an alarm.

1-2) If manual function is selected, compressor will run at once without 5 minutes delay in any mode. If the refrigerator is on the defrost cycle at the moment, defrost will be stopped and manual operation will begin. (Be careful, if manual operation gets started immediately at the moment of compressor off, overload could be occurred.)

1-3) If manual operation works, compressor & F-FAN operate continuously for 24 hours and fresh food compartment will be controlled by the setting temperature.

1-4) When the manual operation runs, setting temperature will be selected automatically as below ; Freezer compartment -14℉(-25℃), Fresh food compartment 32℉(1℃).

1-5) During manual operation Power Freeze & Power Cool function will not be worked. If a function is selected, the power function icon of the selected one will be off automatically after 10 seconds.

1-6) Manual operation can be canceled during manual operation by turning on the appliance after power off(resest) or choosing the following step 4) test cancel mode.

1-7) When the manual operation runs, alarm (0.25 seconds ON/0.75 seconds OFF) will beep continuously until manual operation is completed and there is no function to make the sound stop.

TROUBLESHOOTING

2) Manual defrost **(R : Fresh food compartment)** function

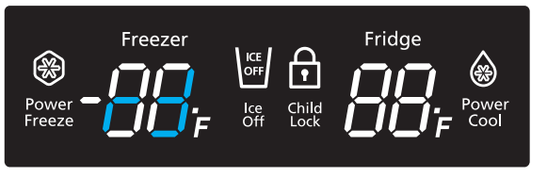

2-1) If any key is pressed one more time during manual operation (Fresh food compartment), "rd" shows in the display and then manual operation will be canceled at once and fresh food compartment will be defrosted.

2-2) At this moment, alarm beeps for 3 seconds from the beginning, and then beeps 0.1 sec ON/ 1 sec OFF during manual defrost (Fresh food compartment) function.

3) Manual defrost **(R & F : Fresh food & Freezer compartment)** function

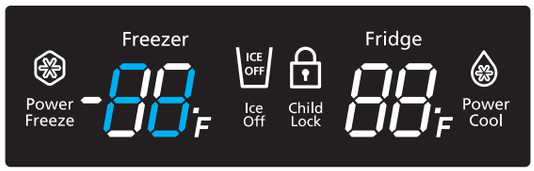

3-1) If any key is pressed one more time during manual defrost (defrost of fresh food compartment, "rd") "Fd" shows on the display and then fresh food and freezer compartments defrost will operate. Simultaneous manual defrost of Fresh food and Freezer compartment is on the extension of fresh food compartment, and when it begins, it operates by comparing the temperature of Freezer Heater ON, not compare the temperature of fresh food Heater ON separately, That is, in case of manual defrost of fresh food, it is the Heater On condition and if the simultaneous manual defrost of fresh food and freezer compartment key before completing deforest, it does not make fresh food compartment heater OFF by re-comparing the temperature of fresh food compartment EVA.

3-2) At this time, alarm beeps for 3 seconds from the beginning, and then beeps 0.5 sec. ON/ 0.5sec. OFF during manual defrost function of fresh food and freezer compartment.

4) Test cancel mode

4-1) During defrosting of fresh food and freezer compartments simultaneously, if the display panel changes to the test mode and test button is pressed one more time, defrosting of fresh food and freezer compartments will be canceled at the same time and will return to the normal operation. Or, all test functions will be canceled by turning main power ON and OFF.

4-1-2. Self-diagnostic function

1) Self-diagnostic function in the initial power ON.

1-1) Micom operates self-diagnostic function to check the temperature sensor condition within 1 second when the refrigerator turned On initially.

1-2) If bad sensor is detected by the self-diagnostic function, the all applicable display LED will blink for 0.5-second interval. At this moment, there is no beep sound.
(Refer to self-diagnostic CHECK LIST)

1-3) Self-diagnostic button is recognized only when the error is displayed by the bad sensor. Display does not operate normally but temperature control will be controlled by the emergency operation.

1-4) When the error is detected by self-diagnosis, the error can be canceled automatically if all troubled sensors are corrected or Self-diagnostic function key (Power Freeze + Power Cool) are pressed simultaneously for 8 seconds. (Return to normal display mode)

TROUBLESHOOTING

① If **Power Freeze Key + Power Cool Key are pressed simultaneously for 8 seconds,** the error mode by self-diagnosis will be canceled.

2) Self-diagnostic function during normal operation

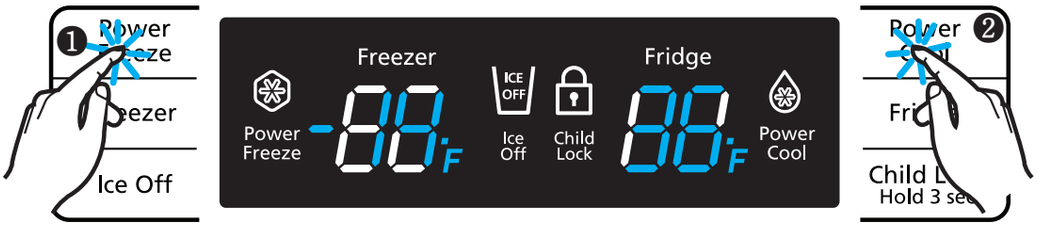

2-1) If Power Freeze Key + Power Cool Key are pressed simultaneously for 6 seconds during normal operation, the temperature setting display will operate for 2 seconds (ALL ON/OFF 0.5 sec each). If Power Freeze Key + Power Cool Key are pressed simultaneously for 8 seconds (including above 2 seconds), self-diagnostic function will be selected.

2-2) At this moment, self-diagnostic function will be returned with buzzer sound 'ding-dong'. If there is an error, display of error will be operated for 30 seconds and then return to normal condition whether problem is corrected or not.
(Buzzer sounds 'ding-dong') (Refer to self-diagnosis CHECK LIST).

2-3) Input by button is not acceptable during self-diagnostic function.

TROUBLESHOOTING

∗ Self-diagnosis CHECK LIST

NO	Trouble item	Display LED	Trouble contents
1	Ice Maker Sensor Error	R-1-ⓐ	ICE MAKER SENSOR part error.
2	R-Sensor Error	R-1-ⓑ	R SENSOR part error.
3	R-DEF-Sensor Error	R-1-ⓒ	R defrost SENSOR part error.
4	R-FANError	R-1-ⓓ	R inner fan motor part error.
5	Ice Maker function Error	R-1-ⓔ	ICE MAKER operation error.
6	R-DEF. - Heater Error	R-1-ⓖ	R defrost part error.
7	Ambient-Sensor Error	F-1-ⓐ	External SENSOR part error.
8	F-Sensor Error	F-1-ⓑ	F SENSOR part error.
9	F-DEF-Sensor Error	F-1-ⓒ	F defrost SENSOR part error.
10	F-FAN Error	F-1-ⓓ	F inner fan motor part error.
11	C-FAN Error	F-1-ⓔ	Machine room fan motor part error.
12	F-DEF. - Heater Error	F-1-ⓖ	F defrost part error.

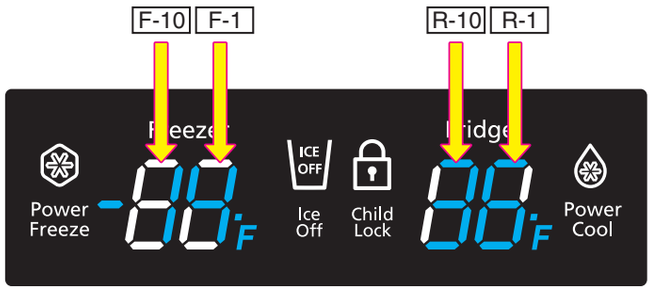

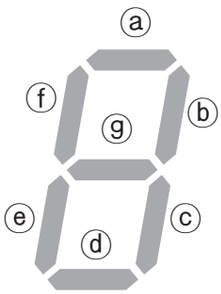

TROUBLESHOOTING

∗ Self-diagnostics check list

LED	Item	Trouble contents	Diagnostic method
R-1-ⓐ	Ice Maker Sensor Error	Display error : In case of Separation of sensor housing part, contact error, disconnection, short circuit. Display error by temperature : when the sensing temperature is more than 149℉ (+65℃) or less than -58℉(-50℃).	When checking the voltage of MAIN PCB CN90 #3 ↔ #4 : Shall be between 4.5V~1.0V.
R-1-ⓑ	R-Sensor Error		When checking the voltage of MAIN PCB CN30 #3 ↔ #8 : Shall be between 4.5V~1.0V.
R-1-ⓒ	R-DEF-Sensor Error		When checking the voltage of MAIN PCB CN30 #4 ↔ #8 : Shall be between 4.5V~1.0V.
R-1-ⓓ	R-FAN Error	Display error : In case of Feed Back signal line contact error, separation of motor wire, motor itself error during operation of applicable fan motor.	Voltage of MAIN PCB CN76 Yellow ↔ Gray : Shall be between 7V~12V.
R-1-ⓔ	Ice Maker Error	Display error : When ice making kit is harvested more than 3times and level error. ** Only for the Ice Maker applied model.	After replacing ice maker, check the operation by turning the appliance ON again.
R-1-ⓖ	R-DEF. Error	**Fresh food Compartment** Display error : In case of separation of defrost heater housing, contact error, disconnection, short circuit, or temperature fuse error. Display error : If defrost does not finish though the defrost of fresh food compartment is heating continuously for more than 80 minutes.	After separating MAIN PCB CN72 wire from PCB, the checked resistance value of CN70 White ↔ Orange shall be 103/397ohm ± 10% (Resistance value is varied by input power) ↔ Model without Ice maker (120ohm ± 10%) Check 0 Ohm for heater short, & ∞ Ohm for wire / bimetal Open.
F-1-ⓐ	Ambient-Sensor Error	Display error : In case of separation of sensor housing parts, contact error, disconnection, short circuit. Display error by temperature : When the sensing temperature is more than 149℉ (+65℃) or less than -58℉(-50℃).	When checking the voltage of MAIN PCB CN31 #1 ↔ #3 : Shall be between 4.5V~1.0V.
F-1-ⓑ	F-Sensor Error		When checking the voltage of MAIN PCB CN30 #5 ↔ #8 : Shall be between 4.5V~1.0V.
F-1-ⓒ	F-DEF-Sensor Error		When checking the voltage of MAIN PCB CN30 #6 ↔ #8 : Shall be between 4.5V~1.0V.
F-1-ⓓ	F-FAN Error	Display error : In case of Feed Back signal line contact error, separation of motor wire, motor itself error during operation of applicable fan motor.	Voltage of MAIN PCB CN76 Pink ↔ Gray : Shall be between 7V~12V.
F-1-ⓔ	C-FAN Error	Display error : In case of Feed Back signal line contact error, separation of motor wire, motor itself error during operation of applicable fan motor.	Voltage of MAIN PCB CN76 Blue ↔ Gray : Shall be between 7V~12V.
F-1-ⓖ	F-DEF. Error	**Freeze Compartment** Display error : In case of separation of defrost heater housing, contact error, disconnection, short circuit or temperature fuse error. Display error : If defrost does not finish though the defrost of freeze compartment is heating continuously for more than 70 minutes.	After separating MAIN PCB CN72 wire from PCB, the checked resistance value of CN70 Brown ↔ Orange shall be 66/240 ohm ± 10%. (Resistance value is varied by input power) Check 0 Ohm for heater short, & ∞ Ohm for wire / bimetal Open.

TROUBLESHOOTING

4-1-3. Display function of Load condition

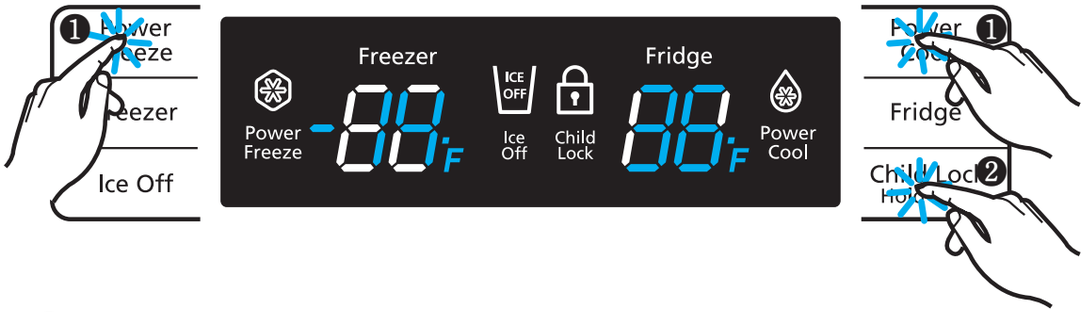

① If **Power Freeze Key + Power Cool Key are pressed simultaneously for 6 seconds, All ON/OFF will blink at 0.5 second intervals for 2 seconds.**

② If taking the finger off from the keys when above blinking condition and press **Fridge Key,** load condition mode will be started.

1) If Power Freeze Key + Power Cool Key are pressed simultaneously for 6 seconds, ALL ON/OFF will blink at 0.5 second intervals for 2 seconds.
2) At this moment, if taking the finger off from Power Freeze Key + Power Cool Key and pressing Fridge Key, load condition display mode will be returned with alarm ("Ding-dong").
3) Load condition display mode shows the load that MICOM signal is outputting. But, it means that MICOM signal is outputting and does not means whether load is operating or not actually. That is, though load operation is displayed, load could not be operated by actual load error, PCB relay error, or etc. And this function would be applied at Service (A/S).
4) Load condition display function will maintain for 30 seconds and then normal condition will be returned automatically.
5) Load condition display is as below.

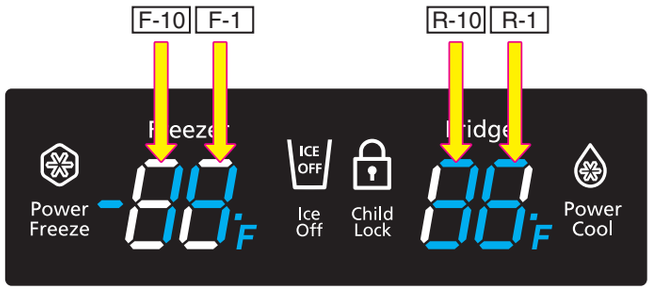

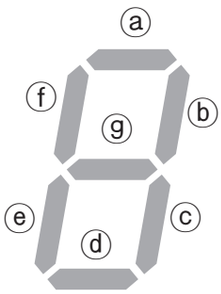

TROUBLESHOOTING

∗ Load mode Check list

Display LED	Display contents	Operation contents
R-1-ⓐ	R-FAN High	When fresh food compartment FAN High operates, applicable LED ON.
R-1-ⓑ	R-FAN Low	When fresh food compartment FAN Low operates, applicable LED ON.
R-1-ⓒ	R-DEF Heater	When fresh food compartment defrost heater operates, LED ON.
R-1-ⓓ	Start Mode	When initial power applied to refrigerator, LED ON.
R-1-ⓔ	Overload condition	When ambient temperature is more than 93℉(34℃), LED ON.
R-1-ⓕ	Low temperature condition	When ambient temperature is less than 72℉(22℃), LED ON.
F-1-ⓔ,ⓕ ALL LED Off	Normal Condition	When the ambient temperature is between 73℉(23℃) ~ 91℉(33℃).
R1-ⓖ	Exhibition Mode	At the display mode, LED ON.
F-1-ⓐ	COMP.	When compressor operates, applicable LED ON.
F-1-ⓑ	F-FAN High	When freezer FAN High operates, applicable LED ON.
F-1-ⓒ	F-FAN Low	When freezer FAN Low operates, applicable LED ON.
F-1-ⓓ	F-DEF Heater	When freezer defrost heater operates, LED ON.
R-10-ⓔ	C-FAN High	When compressor FAN High operates, applicable LED ON.
R-10-ⓕ	C-FAN Low	When compressor FAN Low operates, applicable LED ON.

TROUBLESHOOTING

4-1-4. Display / Exhibition mode setting function

① If **Power Freeze Key + Freezer Key** are pressed for 3 seconds,
exhibition / display mode will be started.

1) If **Power Freeze Key + Freezer Key** are pressed simultaneously for 3 seconds during normal operation, exhibition / display mode will be started with buzzer sound ("Ding-dong").
2) If above Power Freeze Key + Freezer Key are pressed repeatedly, exhibition / display mode will be canceled.
3) If exhibition / display mode is selected, "OF-OF" blinks on the temperature setting display of the panel and it indicates the refrigerator has entered the exhibition / display mood.
4) If fresh food and freezer compartments sensors are higher than 149℉(65℃) during exhibition / display mode, exhibition / display mode will be canceled automatically and cooling operation will be returned. (There is no buzzer sound when the exhibition/display mode is canceled by the temperature.)
5) Operation contents of exhibition/display mode
   -. All function like display, fan motor, etc operate normally, but only compressor does not operates.
   -. Defrost is not operated.
   -. Display function of initial actual temperature is finished.
   -. Exhibition/Display mode will be operated though Power ON after Power OFF under the exhibition/Display mode condition.

4-1-5. Option setting function

• If Freezer Key + Power Cool Key are pressed simultaneously for 12 seconds during normal operation, fresh food and freezer compartments temperature display will be changed to option setting mode.

TROUBLESHOOTING

① If **Freezer Key + Power Cool Key are pressed simultaneously for 12 seconds**, option setting mode will be started.

Key control method after changing to option mode.

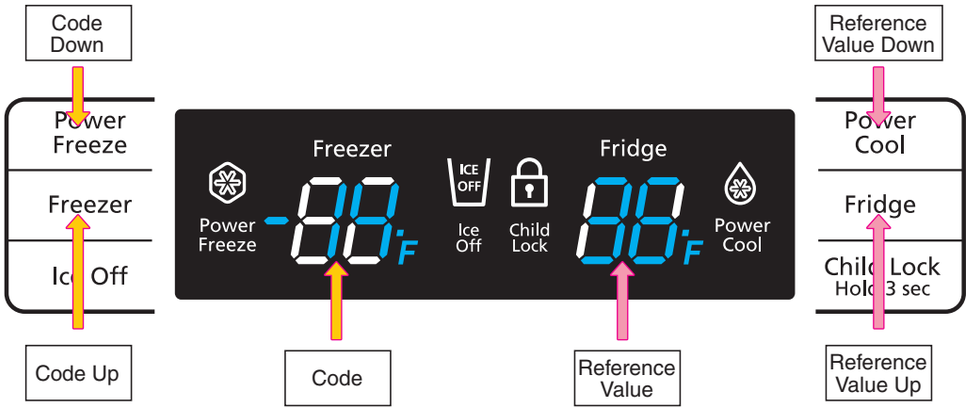

∗ Key control in option mode

Power Freeze Key	Code Down key
Freezer Key	Code Up key
Power Cool key	Reference Value down key
Fridge key	Reference Value Up key

• If the display changes to option setting mode, all displays will be off except freezer and fresh food compartments temperature display as below. (Fresh food and freezer compartments is explained only because all options are operated with the same method according to the option table.)

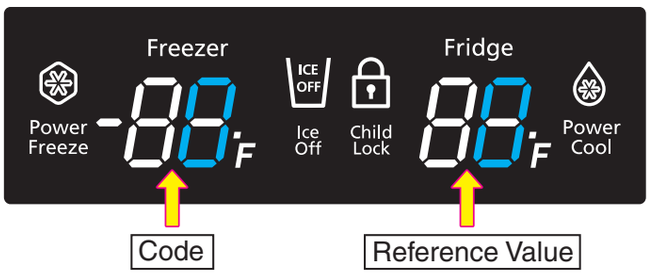

1) For example, if you want to change freezer compartment standard temperature to -4℉(-2℃) by operating option, do as below. This function is for changing the standard temperature. In -2℉(-19℃) of current temperature of freezer compartment, if you make the temperature lower to -℉(-2℃) by the option, the standard temperature would be controlled -6℉(-21℃) Therefore, if you change the setting of temperature option to -2℉(-19℃) on the panel, the appliance will be operated with -6℉(-21℃). It means that standard temperature is controlled -4℉(-2℃) less than setting temperature in the display.

NOTE

Basically, option function has cleared data at shipping process. Therefore, all setting value are "0". But, check the quality information manual or specifications, because setting value could be changed particularly for the purpose of improving quality at mass producing process.

TROUBLESHOOTING

2) After changing to the option mode, fresh food compartment "0", freezer compartment "0" will be displayed. (Basically, fresh food compartment "0", freezer "0" would be set at shipping process, but setting value could be changed for the purpose of improving quality at mass producing process.)
   - If fresh food compartment "0" shows only, temperature reference value of freezer compartment will be set and current freezer compartment temperature code will be displayed on the freezer temperature display.
3) If freezer compartment "4" is set as below freezer compartment code after fresh food compartment "0" is set, standard temperature of freezer compartment will be lower than 28.4℉(-2.0℃).(Refer to the picture "Changing the freezer compartment temperature")

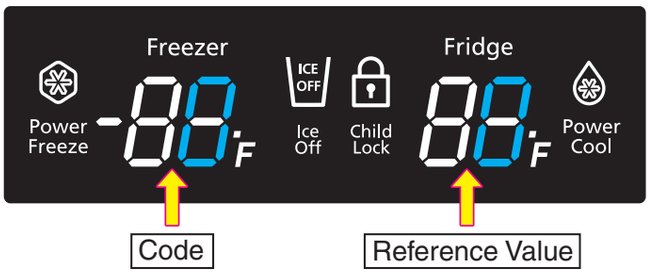

: If you wait for 20 seconds after completing the setting, MICOM will save the setting value to the EEPROM and normal display will be returned and the option setting mode will be canceled.

4) Option changing method as above is the same as all LMF model.
5) Option function is set in the EEPROM at shipping process in the factory. You would better not to change the option of your own. Completing the setting is that option function return to normal display after 20 seconds. Do not turn off the appliance before returning to the normal display mode.

NOTE

Option setting function exists in the other items. We will skip the explanation of the other functions by the option because it is associated with refrigerator control function and is not needed at SERVICE.
(Please do not set the other options except above SERVICE Manual.)

TROUBLESHOOTING

4-1-5. Option TABLE

1) Temperature changing table of freezer compartment

Setting ITEM	Freezer Temp Shift
Reference Value	Fridge Room 7-SEG
	0

Setting value	
Freezer Compartment Code	Temp. compensation
0	32°F(0.0℃)
1	31.1°F(-0.5℃)
2	30.2°F(-1.0℃)
3	29.3°F(-1.5℃)
4	28.4°F(-2.0℃)
5	27.5°F(-2.5℃)
6	26.6°F(-3.0℃)
7	25.7°F(-3.5℃)
8	32.9°F(+0.5℃)
9	33.8°F(+1.0℃)
10	34.7°F(+1.5℃)
11	35.6°F(+2.0℃)
12	36.5°F(+2.5℃)
13	37.4°F(+3.0℃)
14	38.3°F(+3.5℃)
15	39.2°F(+4.0℃)

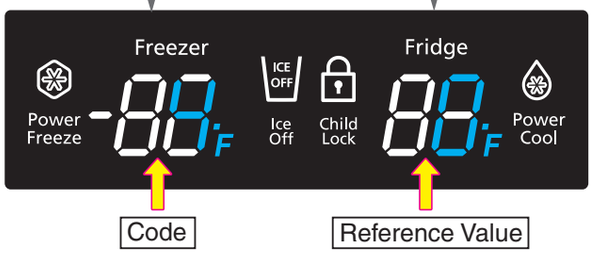

ex) If you want to change the freezer standard temperature to -28.4°F(-2°C)

2) Temperature changing table of fresh food compartment

Setting value	Fridge Temp Shift
Reference Value	Fridge Room 7-SEG
	1

Setting value	
Freezer compartment Code	Temp. compensation
0	32°F(0.0℃)
1	31.1°F(-0.5℃)
2	30.2°F(-1.0℃)
3	29.3°F(-1.5℃)
4	28.4°F(-2.0℃)
5	27.5°F(-2.5℃)
6	26.6°F(-3.0℃)
7	25.7°F(-3.5℃)
8	32.9°F(+0.5℃)
9	33.8°F(+1.0℃)
10	34.7°F(+1.5℃)
11	35.6°F(+2.0℃)
12	36.5°F(+2.5℃)
13	37.4°F(+3.0℃)
14	38.3°F(+3.5℃)
15	39.2°F(+4.0℃)

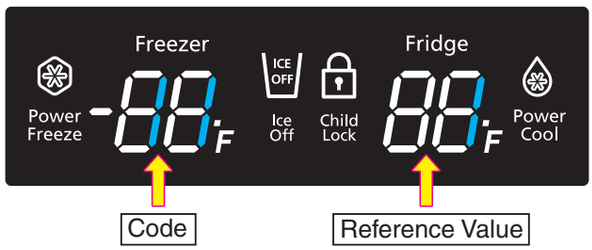

ex) If you want to change the freezer compartment standard temperature to 35.6°F(2°C).

TROUBLESHOOTING

- Below options are applied to the applicable model with ice maker only.
  Do not set below options to the model without ice maker.

3) Change the waiting time for sweeping ice in the ice maker. Set the waiting time of sweeping which discharges the ice from ice maker.

Setting ITEM	Waiting time for sweeping of ICE MAKER
Reference Value	Fridge Room 7-SEG
	3

Setting value Freezer Compartment Code	Temp. compensation
0	58 min.
1	57 min.
2	56 min.
3	55 min.
4	54 min.
5	53 min.
6	52 min.
7	51 min.
8	50 min.
9	49 min.
10	48 min.
11	47 min.
12	46 min.
13	45 min.
14	59 min.
15	60 min.

ex) When changing the waiting time for sweeping to 60 mins.

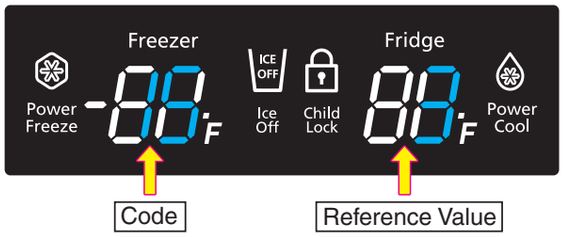

4) Change the sweeping sensor temperature of ice maker. It is the standard temperature of sensor for judging to check the ice in the ice maker freeze completely.

Setting ITEM	Regulate the temperature for sweeping of ICE MAKER
Reference Value	Fridge Room 7-SEG
	4

Setting value Freezer Compartment Code	Temp. compensation
0	5.0℉(-15℃)
1	3.2℉(-16℃)
2	1.4℉(-17℃)
3	6.8℉(-14℃)
4	8.6℉(-13℃)
5	10.4℉(-12℃)
6	12.2℉(-11℃)
7	14.0℉(-10℃)

ex) When changing the sensor temperature to 6.8℉(-14℃).

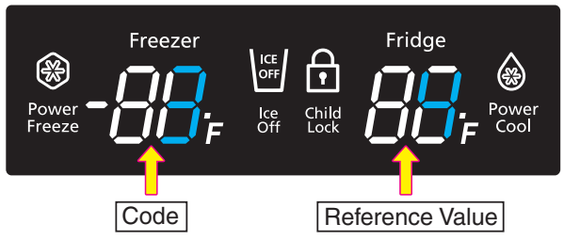

TROUBLESHOOTING

4-2) Diagnostic method according to the trouble symptom(Flow Chart)

DATA1.Temperature table
Resistance value and MICOM port voltage of sensor according to the temperature
SENSOR CHIP : based on PX41C

˚C	˚F	Voltage	Resistance	˚C	˚F	Voltage	Resistance	˚C	˚F	Voltage	Resistance
-50	-58	4.694	153319	-5	23	3.107	16419	40	104	1.153	2997
-49	-56.2	4.677	144794	-4	24.8	3.057	15731	41	105.8	1.124	2899
-48	-54.4	4.659	136798	-3	26.6	3.006	15076	42	107.6	1.095	2805
-47	-52.6	4.641	129294	-2	28.4	2.955	14452	43	109.4	1.068	2714
-46	-50.8	4.622	122248	-1	30.2	2.904	13857	44	111.2	1.040	2627
-45	-49	4.602	115631	0	32	2.853	13290	45	113	1.014	2543
-44	-47.2	4.581	109413	1	33.8	2.802	12749	46	114.8	0.988	2462
-43	-45.4	4.560	103569	2	35.6	2.751	12233	47	116.6	0.963	2384
-42	-43.6	4.537	98073	3	37.4	2.700	11741	48	118.4	0.938	2309
-41	-41.8	4.514	92903	4	39.2	2.649	11271	49	120.2	0.914	2237
-40	-40	4.490	88037	5	41	2.599	10823	50	122	0.891	2167
-39	-38.2	4.465	83456	6	42.8	2.548	10395	51	123.8	0.868	2100
-38	-36.4	4.439	79142	7	44.6	2.498	9986	52	125.6	0.846	2036
-37	-34.6	4.412	75077	8	46.4	2.449	9596	53	127.4	0.824	1973
-36	-32.8	4.385	71246	9	48.2	2.399	9223	54	129.2	0.803	1913
-35	-31	4.356	67634	10	50	2.350	8867	55	131	0.783	1855
-34	-29.2	4.326	64227	11	51.8	2.301	8526	56	132.8	0.762	1799
-33	-27.4	4.296	61012	12	53.6	2.253	8200	57	134.6	0.743	1745
-32	-25.6	4.264	57977	13	55.4	2.205	7888	58	136.4	0.724	1693
-31	-23.8	4.232	55112	14	57.2	2.158	7590	59	138.2	0.706	1642
-30	-22	4.199	52406	15	59	2.111	7305	60	140	0.688	1594
-29	-20.2	4.165	49848	16	60.8	2.064	7032	61	141.8	0.670	1547
-28	-18.4	4.129	47431	17	62.6	2.019	6771	62	143.6	0.653	1502
-27	-16.6	4.093	45146	18	64.4	1.974	6521	63	145.4	0.636	1458
-26	-14.8	4.056	42984	19	66.2	1.929	6281	64	147.2	0.620	1416
-25	-13	4.018	40938	20	68	1.885	6052	65	149	0.604	1375
-24	-11.2	3.980	39002	21	69.8	1.842	5832	66	150.8	0.589	1335
-23	-9.4	3.940	37169	22	71.6	1.799	5621	67	152.6	0.574	1297
-22	-7.6	3.899	35433	23	73.4	1.757	5419	68	154.4	0.560	1260
-21	-5.8	3.858	33788	24	75.2	1.716	5225	69	156.2	0.546	1225
-20	-4	3.816	32230	25	77	1.675	5039	70	158	0.532	1190
-19	-2.2	3.773	30752	26	78.8	1.636	4861	71	159.8	0.519	1157
-18	-0.4	3.729	29350	27	80.6	1.596	4690	72	161.6	0.506	1125
-17	1.4	3.685	28021	28	82.4	1.558	4526	73	163.4	0.493	1093
-16	3.2	3.640	26760	29	84.2	1.520	4369	74	165.2	0.481	1063
-15	5	3.594	25562	30	86	1.483	4218	75	167	0.469	1034
-14	6.8	3.548	24425	31	87.8	1.447	4072	76	168.8	0.457	1006
-13	8.6	3.501	23345	32	89.6	1.412	3933	77	170.6	0.446	978
-12	10.4	3.453	22320	33	91.4	1.377	3799	78	172.4	0.435	952
-11	12.2	3.405	21345	34	93.2	1.343	3670	79	174.2	0.424	926
-10	14	3.356	20418	35	95	1.309	3547	80	176	0.414	902
-9	15.8	3.307	19537	36	96.8	1.277	3428	81	177.8	0.404	877
-8	17.6	3.258	18698	37	98.6	1.253	3344	82	179.6	0.394	854
-7	19.4	3.208	17901	38	100.4	1.213	3204	83	181.4	0.384	832
-6	21.2	3.158	17142	39	102.2	1.183	3098	84	183.2	0.375	810

TROUBLESHOOTING

4-2-1. If the trouble is detected by self-diagnosis

- The error of sensor will be displayed on the front of display.
  When the error of sensor is detected at initial power ON, display of abnormal sensor part will blink.
- The appliance will not stop operating when the error of sensor is detected during operation of the appliance. But normal cooling might be not operated if the appliance is operated by the emergency operation mode. You would better to check the appliance according to the self-diagnosis of the manual.

1) If Ice Maker Sensor has trouble

ERROR Code

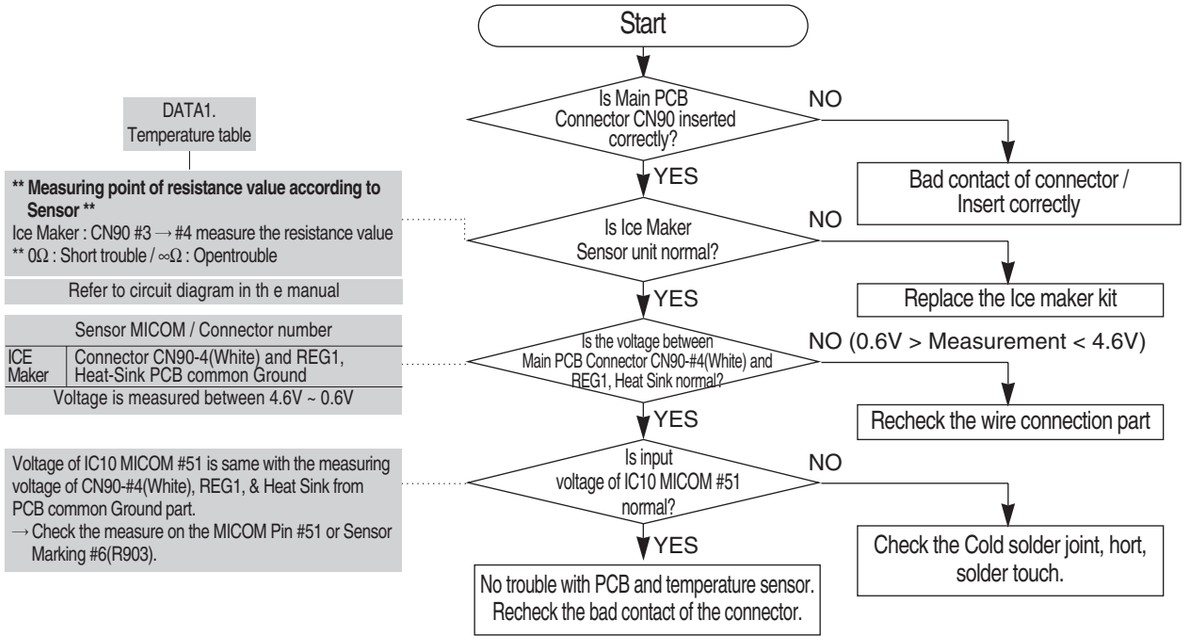

☞ Checking method of Ice Maker Sensor resistance
CN90 #3(White) ↔ #4(White)
- Compare with the temperature table after measuring.

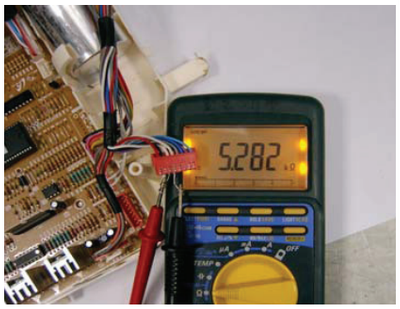

☞ Checking method of Ice Maker Sensor voltage - Measure the voltage of Sensor Check Point #6(IC10 MICOM #51) on PCB or CN90-#4(White) ↔ REG1, Heat Sink.
-. Compare with the temperature table after measuring. Below is the Measuring voltage of CN90-#4(White)↔ REG1, Heat Sink.

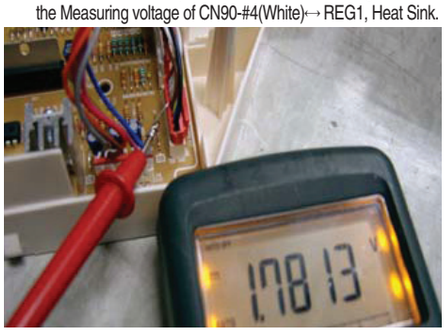

Common PCB
Ground of REG1 Heat-Sink

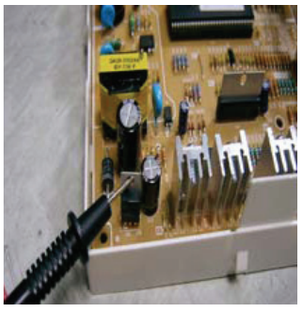

TROUBLESHOOTING

2) If R Sensor has trouble

ERROR Code

DATA1.
Temperature Table

**** Measuring point of resistance value according to Sensor ****
R : CN30 #3 ↔ #8 Measure the resistance value
** ∞Ω : Short trouble / ∞Ω : Open trouble

Refer to circuit diagram in the manual

Sensor MICOM/Connector number	
R	Connector CN30#6(White) to REG1 HEAT-SINK PCB typical Ground
Voltage is measured between 4.6V ~ 0.6V	

Voltage of IC10 MICOM #53 is same with the measuring voltage of CN30-#3(Red), REG1, & Heat Sink from PCB common Ground part.
→ Check the measure on MICOM or Sensor Marking #1(R301).

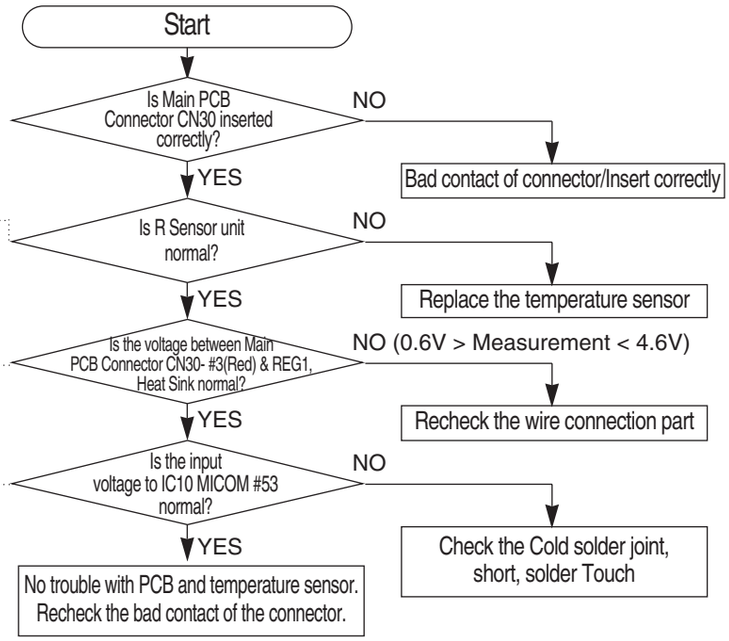

☞ Checking method of R Sensor resistance CN30-#3(White) ↔ #8(Gray)
-. Compare with the temperature table after measuring

☞ Checking method of R Sensor voltage.
-. Measure the voltage of Sensor Check Point #1(IC10 MICOM #53) on PCB or CN30-#3(Red) ↔ REG1, Heat Sink
-. Compare with the temperature table after measuring. Below is measuring voltage of CN30-#3(Red) ↔ REG1, Heat Sink.

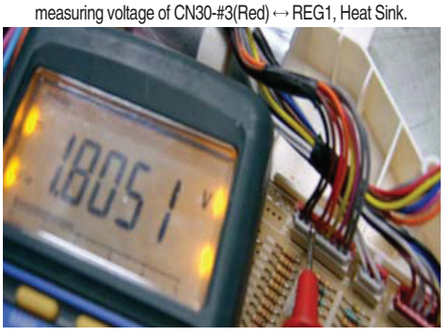

Common PCB
Ground of REG1, Heat Sink

TROUBLESHOOTING

3) If R DEF Sensor has trouble

ERROR Code

DATA1.
Temperature Table

**** Measuring point of resistance value according to Sensor ****
R-DEF : CN30 #4 ↔ #8 Measure the resistance value
** ∞Ω : Short trouble / ∞Ω : Open trouble

Refer to circuit diagram in the manual

Sensor MICOM/Connector Number	
R DEF	Connector CN30-#4(Orange) and REG1 Heat-Sink PCB common Ground
Voltage is measured between 4.6V ~ 0.6V	

Voltage of IC10 MICOM #54 is same with the measuring voltage of CN30-#4(Orange), REG1,& Heat Sink from PCB common Ground part.
→ Check the measure on MICOM or, Sensor Marking #2(R303).

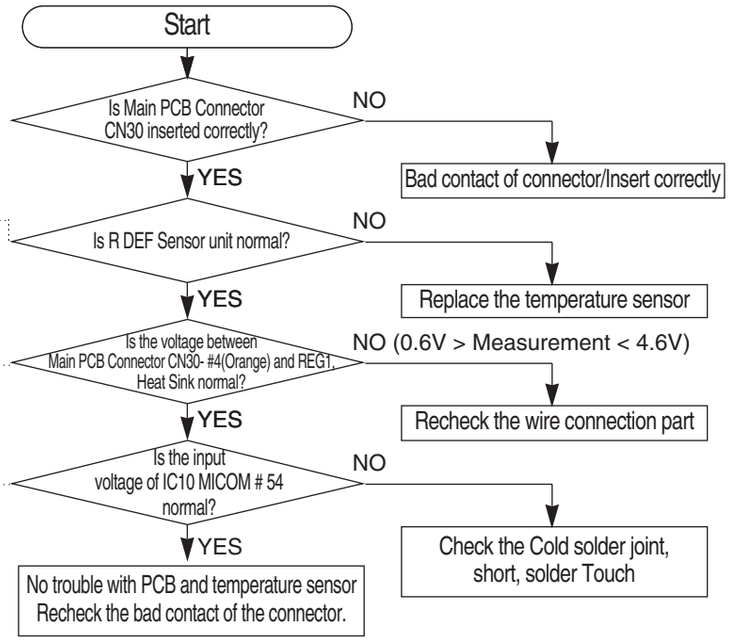

☞ Checking method of R DEF Sensor resistance
CN30-#4(Orange) ↔ #8(Gray)
-. Compare with temperature table after measuring.

☞ Check method of R DEF Sensor voltage
-. Measure the voltage of Sensor Check Point #2(IC10 MICOM #54) on PCB or CN30-#4(Orange) ↔ REG1, Heat Sink.
-. Compare with temperature table after measuring.

Below is the measuring voltage of CN30-"4"(Orange) ↔ REG1, Heat Sink

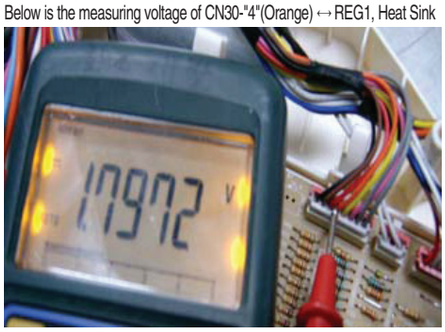

Common PCB
Ground of REG1 Heat Sink

TROUBLESHOOTING

4) If Ambient Sensor has trouble

ERROR Code

DATA1.
Temperature table

**** Measuring point of resistance value according to Sensor ****
Ambient : CN31#1 ↔ #3 Measure the resistance value
** Placed in the right top table of upper hinge.
** ∞Ω : Short trouble / ∞Ω : Open trouble

Refer to circuit diagram in the manual

Sensor MICOM/Connector number	
Ambient	Connector CN31-#1(White) and REG1 Heat-Sink PCB common Ground
Voltage measured between 4.6V ~ 0.6V.	

Voltage of IC10 MICOM #59 is same with the measuring voltage of CN31-#1(White), REG1, & Heat Sink from PCB common Ground part.
→ Check the measure on the MICOM or, Sensor Marking #5(R309).

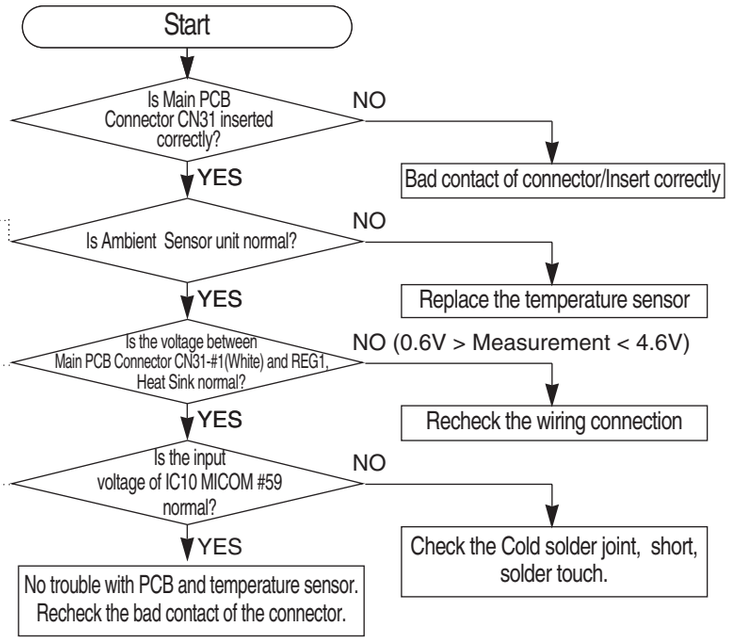

☞ Checking method of Ambient Sensor resistance
CN31-#1(White) ↔ #3(White)
-. Compare with the temperature table after measuring.

☞ Checking method of Ambient Sensor voltage
-. Measure the voltage of Sensor Check Point #5(IC10 MICOM #59) on PCB or CN31-"1"(White) ↔ REG1, Heat Sink.
-. Compare with the temperature table after measuring.
Below is the measuring voltage of CN31- #"1(White) ↔ REG1, Heat Sink

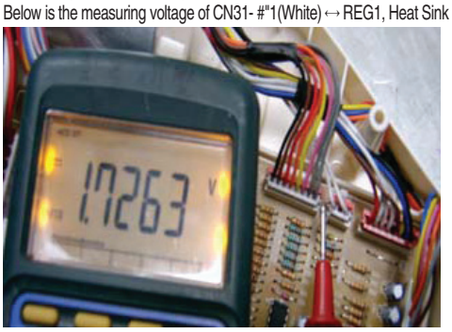

Common PCB
Ground of REG1 Heater Sink

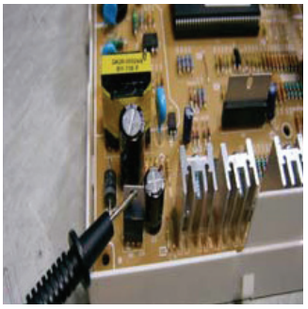

TROUBLESHOOTING

5) If F Sensor has trouble

ERROR Code

DATA1.
Temperature table

**** Measuring point of resistance value according to Sensor ****
F : CN30 #5 ↔ #8 Measure the resistance value
** ∞Ω : Short trouble / ∞Ω : Open trouble

Refer to circuit diagram in the manual

Sensor MICOM/Connector number	
F	Connector CN30-#5(Yellow) and REG1 Heat-Sink PCB common Ground
Voltage is measure between 4.6V ~ 0.6V	

Voltage of IC10 MICOM #57 is same with the measuring voltage of CN31-"5"(Yellow), REG1, & Heat Sink from PCB common Ground part.
→ Check the measure on MICOM or, Sensor Marking #3(R305).

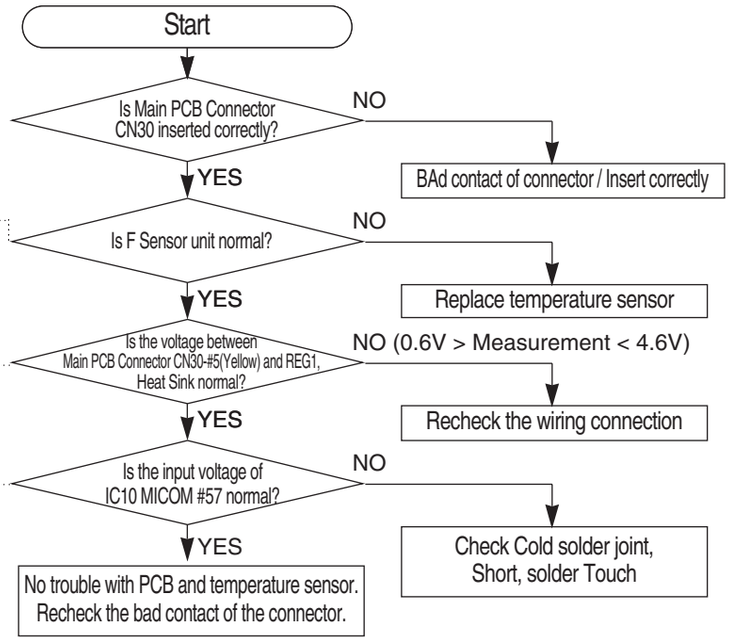

☞ Checking method of F Sensor resistance
CN30-#5(Yellow) ↔ #8(Gray)
-. Compare with the temperature table after measuring.

☞ Checking method of F Sensor voltage
-. Measure the voltage of Sensor Check Point #3(IC10 MICOM #57) on PCB or CN30-#5(Yellow) ↔ REG1, Heat Sink.
-. Compare with the temperature table after measuring.

Below is the measuring voltage of CN30-"5"(Yellow) ↔ REG1, Heat Sink.

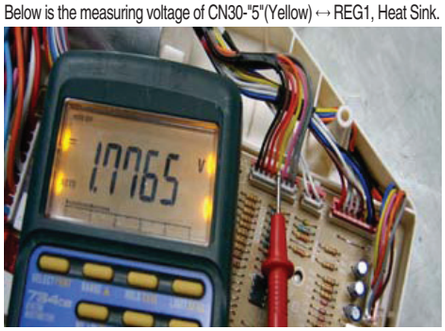

common PCB
Ground of REG1 Heater Sink

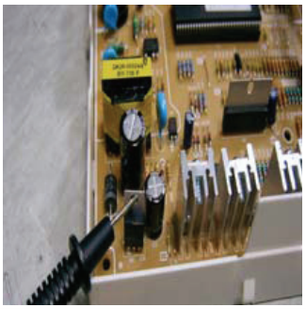

TROUBLESHOOTING

6) If F DEF Sensor has trouble

ERROR Code

DATA1.
Temperature table

**** Measuring point of resistance value according to Sensor ****
F-DEF : CN30 #6 ↔ #8 Measure the resistance value
** ∞Ω : Short trouble / ∞Ω : Open trouble

Refer to circuit diagram in the manual

Sensor MICOM/Connector number	
F DEF	Connector CN30-#6(Pink) and REG1 Heat-Sink PCB commonGround
Voltage is measured between 4.6V ~ 0.6V	

Voltage of IC10 MICOM #58 is same with the measuring voltage of CN30-"6"(Pink) and REG1, & Heat Sink from PCB common Ground part.
→ Check the measure on MICOM or, Sensor Marking #4(R307).

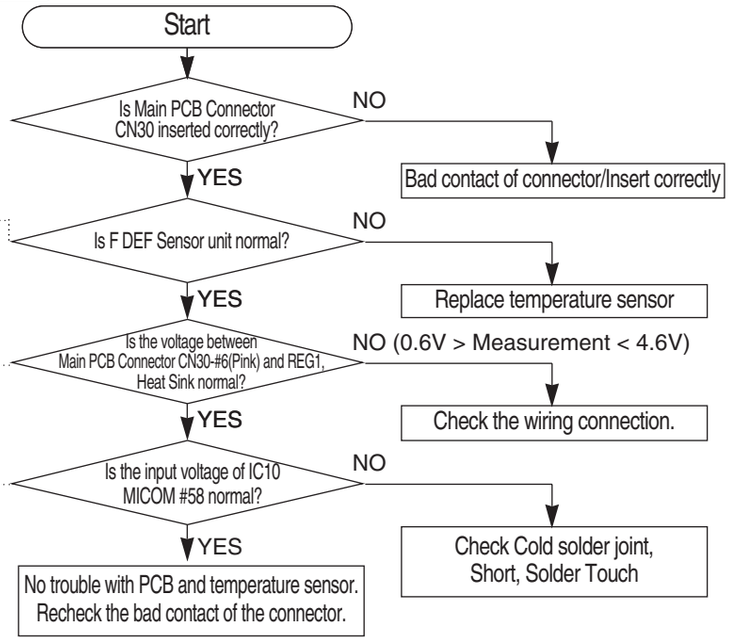

☞ Checking method of F DEF Sensor resistance
CN30-#6(Pink) ↔ #8(Gray)
-. Compare with the temperature table after measuring.

☞ Checking method of F DEF Sensor voltage
-. Measure the voltage of Sensor Check Point #4(IC10 MICOM #58) on PCB or CN30-"6"(Pink) ↔ REG1, Heat Sink.
-. Compare with the temperature table after measuring.
Below is the measuring voltage of CN30-"6"(Pink) ↔REG1, Heat Sink

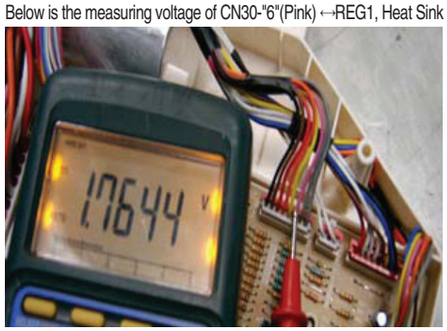

Common PCB
Ground of REG1 Heater Sink

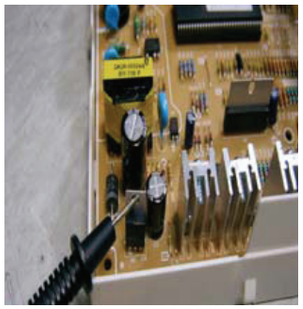

NW-미주향-AC 2010.6.83:47PM 페이지49 in

4-2-2. If FAN does not operate (F, R, C - FAN)

-. The refrigerator of this model has BLDC FAN moror. BLDC motor is driven by DC 7~12V.
-. On the normal condition of COMP ON, it operates together with F-FAN motor.
If door is opened and closed once at a high ambient temperature, it will be operated after 1 minute delay. Therefore, you are advised not to taken it for an error.
-. If there is a trouble, you should select the self-diagnostic function to check the trouble before power off.

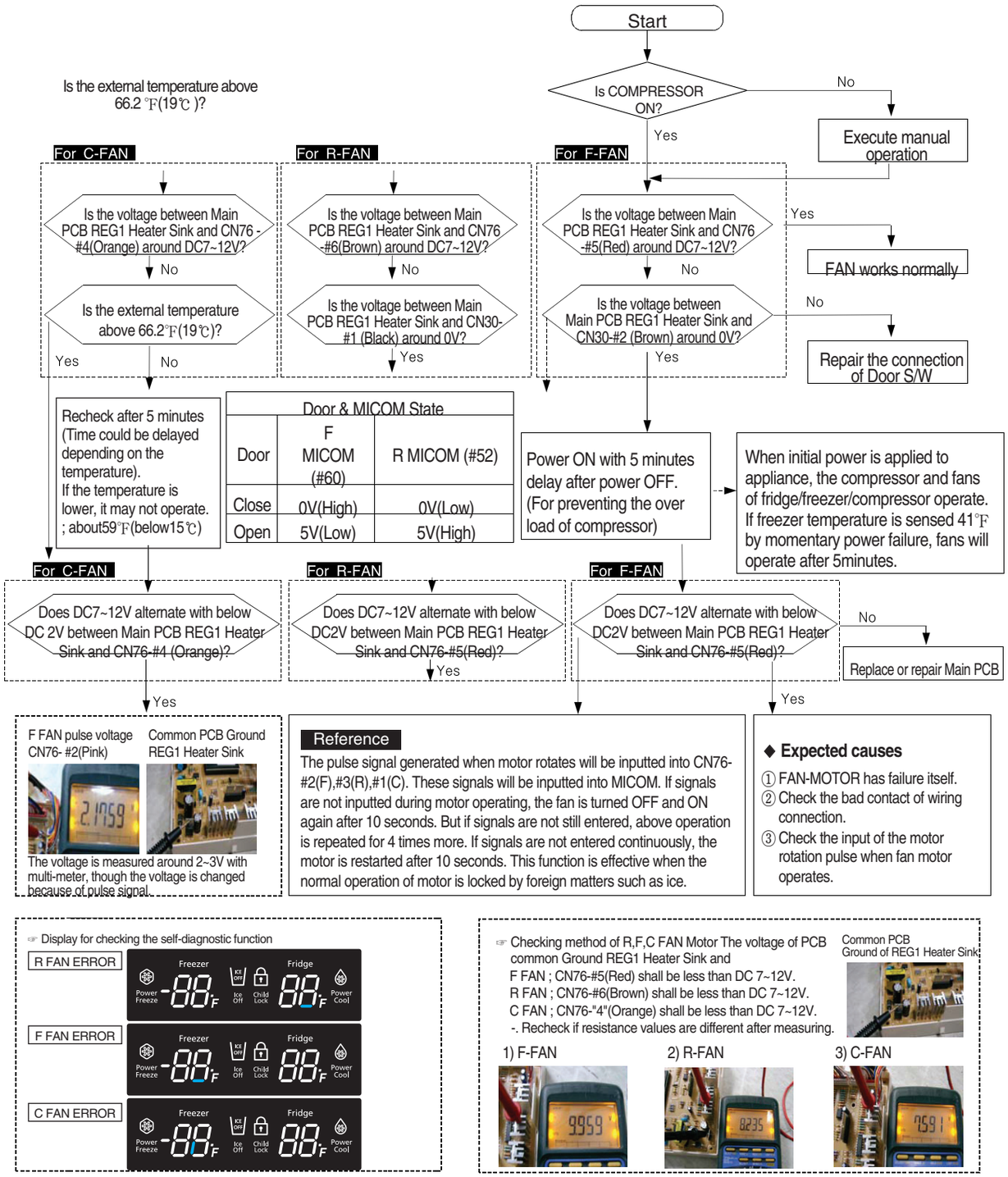

NW-미주향-AC 2010.6.83:47PM 페이지50 in

TROUBLESHOOTING

4-2-3. If Ice Maker does not operate

1. Water is automatically supplied to the Ice Maker by temperature & time and Ice Maker dispenses cubed or crushed ice.
2. Power is applied to the one end of wires all the time, so be careful when disassembling and shell refer to its exploded diagram in any case.
3. Ice Maker operation shall be checked after pressing the Ice Maker Test S/W.(Freezer Ice Maker) it is impossible to check when the power is disengaged.

ERROR Code

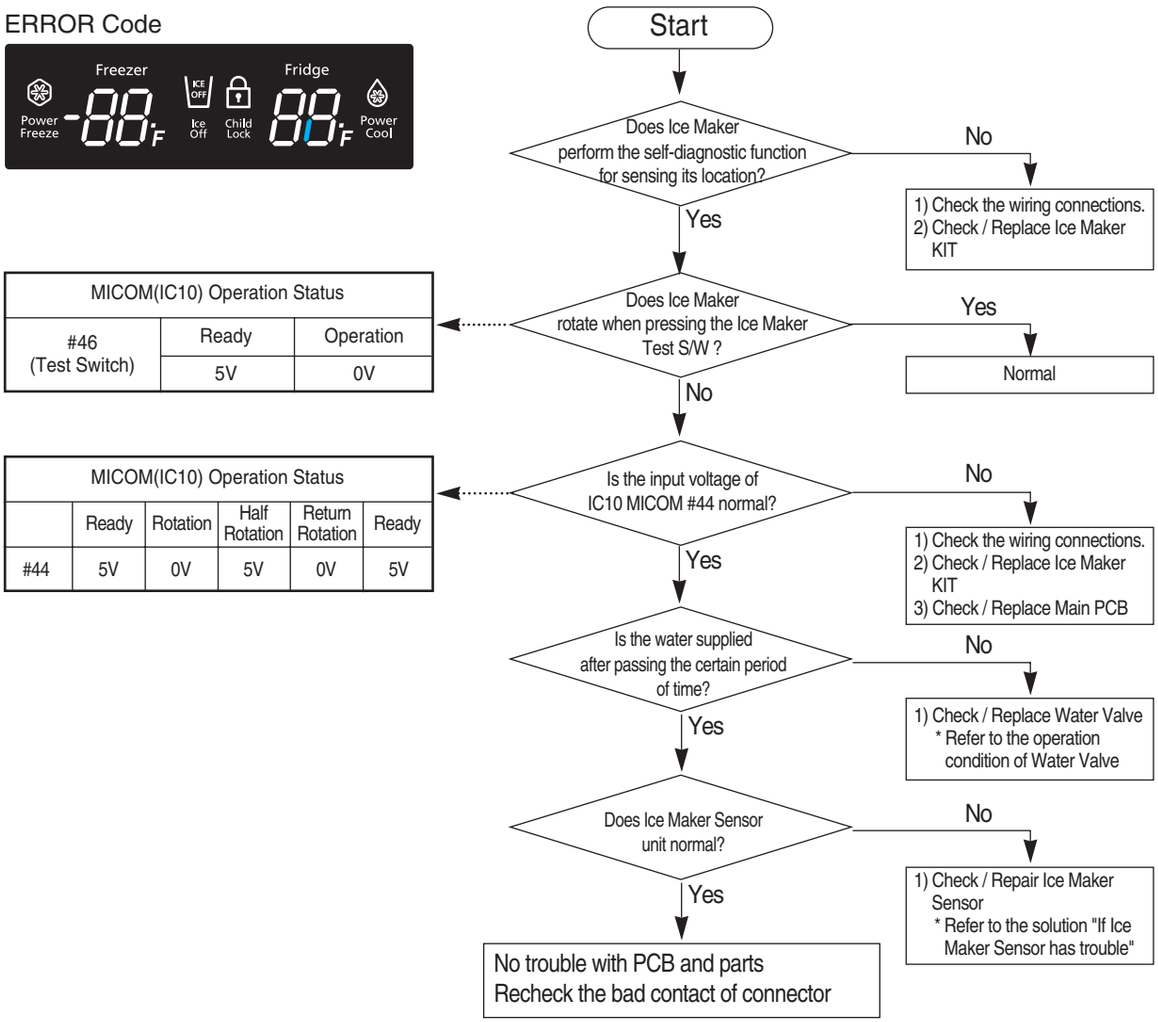

MICOM(IC10) Operation Status		
#46 (Test Switch)	Ready	Operation
	5V	0V

MICOM(IC10) Operation Status					
	Ready	Rotation	Half Rotation	Return Rotation	Ready
#44	5V	0V	5V	0V	5V

☞ Checking method of Ice Maker Voltage
The voltage between PCB common Ground REG1 Heater Sink and
1) Test Switch Operation (press selected) ; CN90-#5(Gray) shell be DC 0V.
Test Switch Ready ; CN90-#5(Gray) shell be less than DC 5V.

1)Test Switch Operation

1)Test Switch Ready

Common PCB
Ground of REG1 Heater Sink

☞ Checking Method of Ice Maker Voltage PCB common Ground REG1 Heater Sink and
2) IC10 MICOM #44 voltage ; Ready(5V) → Rotation(0V) → Half Rotation(5V) → Return(0V) → Ready(5V)
* MICOM #44 voltage is same as Connector CN90-7(Purple).

NW-미주향-AC 2010.6.83:48PM 페이지51 in

TROUBLESHOOTING

4-2-4. If defrost does not operate (F, R DEF Heater)

- If defrost has trouble, select the self-diagnostic function to detect the error of defrost heater before Power off. (Check the function with referring to the self-diagnostic function)

R DEF ERROR

F DEF ERROR

**** Measuring point of defrost value according to Heater ****
F-DEF : CN72 #7(Brown) ↔ #3(Orange)
measure the resistance value(66/240 ohm ± 10%)
R-DEF : CN72 #5(White) ↔ #3(Orange)
measure the resistance value(103(120)/397ohm ± 10%)
** 0Ω : Short trouble / 0Ω : Open(Bimetal, heater) trouble

**** Measuring point of resistance value according to Sensor ****
F-DEF : CN30 #6 ↔ #8 measure the resistance value
R-DEF : CN30 #4 ↔ #8 measure the resistance value
** 0Ω : Short trouble /0Ω : Open trouble

Resistance value of sensor according to temperature		
86℉(30℃)	4.22㎏	Refer to DATA1. Temperature Table for the detailed temperature.
68℉(20℃)	6.05㎏	
50℉(10℃)	8.87㎏	
32℉(0℃)	13.29㎏	
14℉(-10℃)	20.42㎏	
-4℉(-20℃)	32.23㎏	
-22℉(-30℃)	52.41㎏	

**** Measuring Point of resistance value according to Sensor ****
PCB common Ground REG1 Heater Sink and
F-DEF:CN30 #6 (or Sensor Marking #4(R307),
R-DEF:CN30 #4 (or Sensor Marking #2(R303),
measure the resistance value.
** 0V : Short trouble / 5V : Open trouble

Start

Are all the defrost heater normal?
- No → Check the bimetal, heater disconnection itself, wiring connection, etc
- Yes ↓

Is defrost sensor by self-diagnostic normal?
- No → Refer to self-diagnostic function in the manual → Replace and repair the applicable sensor
- Yes ↓

Is the temperature of defrost sensor lower than 53.6℉(12℃)?
- No → Manual operation for a certain period of time
- Yes ↓

Manual defrost of Fridge and Freezer operate simultaneously.

If Power Freeze Key + Fridge Key are pressed simultaneously for 8 seconds and then select any key, 3rd Test Mode(Manual defrost) will be operated.

Is power applied to each defrost heaters?
- No → Normal
- Yes ↓

Does the system return to cooling operation after heating for specified time?
- No → Recheck the applicable sensor which is not returned.
- Yes ↓

Normal

Is connection terminal of Main PCB part normal?
- No → Repair connection terminal
- Yes ↓

Check bimetal, heater itself disconnection, wiring connection, etc.

Replace failure Relay or replace PCB Ass'y

Reference
If defrost sensor temperature of fridge & freezer are higher than 50℉(10℃) & 53.6℉(12℃) by the heating of heater, heating will be finished and returns to the cooling operation after making a pause.

☞ Checking method of F,R DEF Heater resistance value.
F DEF ; CN72-#7(Brown) ↔ #3(Orange)
R DEF ; CN72-#5(White) ↔ #3(Orange)
-. Check additionally, if resistance values are different after the measuring.

1) F DEF Heater

2) R DEF Heater

NW-미주향-AC 2010.6.83:48PM 페이지52 in

4-2-6. If Power is not supplied

Caution

At the power of main PCB, AC input power and a high voltage over DC170V(325V)are occurred. Please take care of yourself on repair and measurement.

- Refer to function and 'reference' parts in the manual when checking Main PCB

Common PCB Ground
REG1 Heater Sink

Input Voltage
115V ± 15%

Check in SMPS part

☞ Checking method of voltage SMPS input ; VAR1 both terminals, or CN10 both terminal AC power.

☞ Checking method of DC secondary output voltage REG1 input ; Regulator 7805 input → Same wih C111 both terminals.
DC 12.0V ± 0.8V

☞ Checking method of DC secondary output voltage REG1 input ; Regulator 7805 input → Same with C113 both terminals.
DC 5V ± 0.5V

- Check Main PCB connection
- Check the connections between upper hinge Cabi-Door
- Check Door Panel PCB connection

Start

Is plug connected in ?
- No → Connect plug again, & check the plug loosening.
- Yes ↓

Is Fuse on the SMPS PCB normal?
- No → 1) Change FUSE AC 250V 2.0A 2) Replace PCB ASS'Y
- Yes ↓

Is 115V applied to both terminals of SMPS power VAR1 ?
- Yes → Check the assembly and connection of wire
- No ↓

Is DC 170V applied to both terminals of BD101 +,-?
- No → 1) Check PCB PATTERN and replace BD1 2) Replace PCB ASS'Y
- Yes ↓

Is 12V applied to both terminal of C111?
- No → Replace PCB ASS'Y
- Yes ↓

Is 5V applied to both terminal of C113?
- No → 1) Check REG1 (KA7805) 2) Replace PCB ASS'Y
- Yes ↓

Does Panel PCB operates normally?
- No → 1) Check & repair the assembly of wire 2) Replace Panel PCB
- Yes ↓

Is the load such as relay normal?
- No → 1) Check the contact of Lead Wire 2) Replace the applicable Relay (Replace PCB Main)
- Yes ↓

Is there any PCB soldering, Short, or breakage?
- No → 1) Solder again 2) Replace PCB Main
- No ↓

Normal (Recheck)

TROUBLESHOOTING

4-2-7. If compressor does not operate

Preliminary Inspection

"Check the compressor with selecting the manual operation"
1. Compressor does not work, unless 5mins pass after satisfying the temperature.
2. Compressor does not work during defrosting.
3. Compressor does not work because it sensing low temperature, unless the fridge & freeze sensor is connected.

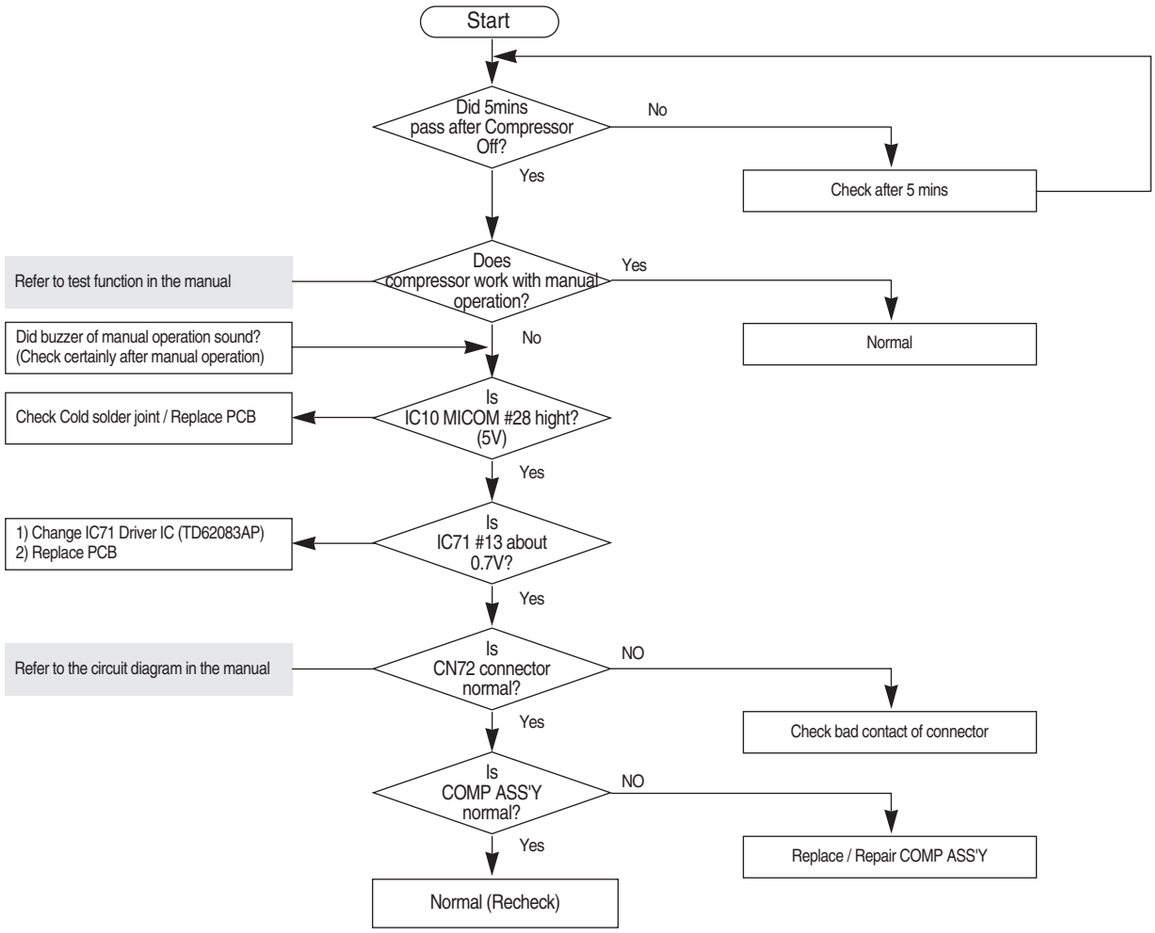

☞ Checking method of voltage
PCB common Ground REG1 Heater Sink and
1) IC10 MICOM #28 ; Voltage is high
(5V ±0.5V) when compressor is working.

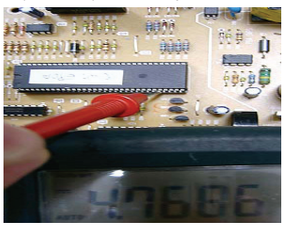

☞ Checking method of voltage
PCB common Ground REG1 Heater Sink and
1) IC71 #13 ; Voltage is Low (0.7V) when
compressor is working.

Common PCB Ground
REG1 Heater Sink

TROUBLESHOOTING

4-2-8. If alarm sounds continuously without stop (Related with buzzer sound)

Preliminary Inspection

1. The alarm of freezer / fridge will sound(Ding-dong) after 2minutes from initial door open, and it keeps sounding(ding-dong) at 1 minutes intervals when opening afterward.
2. The alarm sounds because MICOM sense as door-open when door is not pressed completely. So refrigerator inner lamp will be OFF after 10minutes from sensing door-open. In this case, the inner lamp will not ON though the door is opened actually.

① If 'ding-dong' sounds continuously.

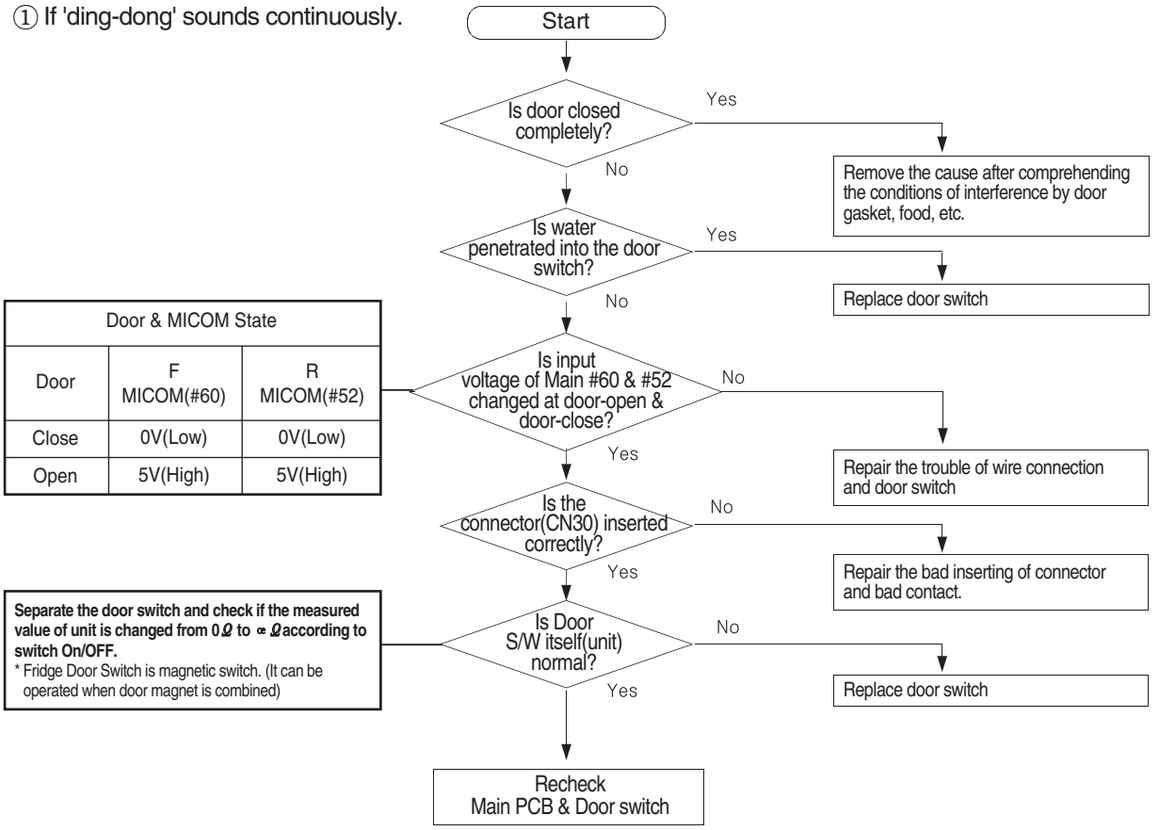

Door & MICOM State		
Door	F MICOM(#60)	R MICOM(#52)
Close	0V(Low)	0V(Low)
Open	5V(High)	5V(High)

Separate the door switch and check if the measured value of unit is changed from 0Ω to ∞Ω according to switch On/OFF.
* Fridge Door Switch is magnetic switch. (It can be operated when door magnet is combined)

② If 'beep-beep' sounds continuously.

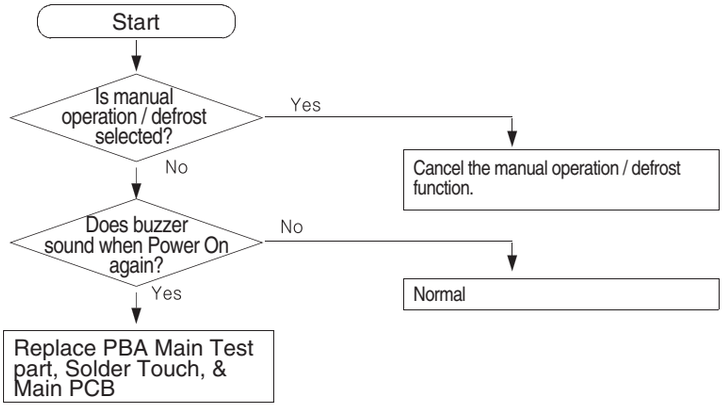

TROUBLESHOOTING

③ If buzzer does not sound

If buzzer does not sounds when button is pressed, manual operation is started, or door is opened, separate Main PCB and then check the breakage of buzzer, bad soldering, etc.
(It is recommended to replace Main PCB when the failure of parts is occurred after checking.)

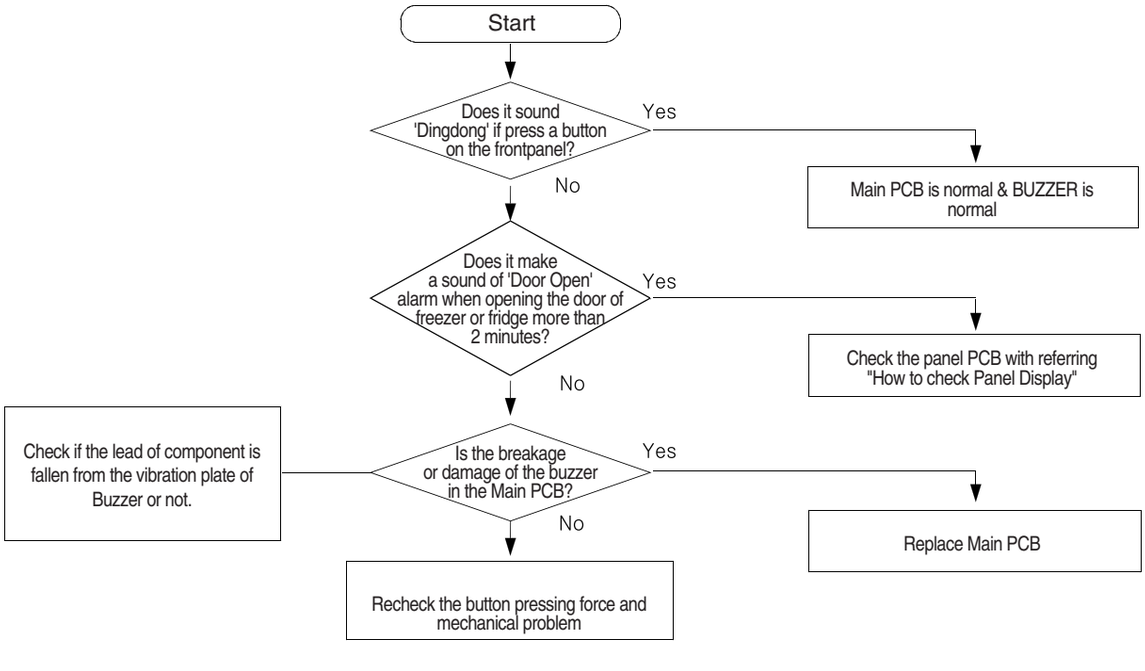

NW-미주향-AC 2010.6.83:48PM 페이지56 in

4-2-9. If Panel PCB does not work normally

① When lightning of Panel PCB is disabled

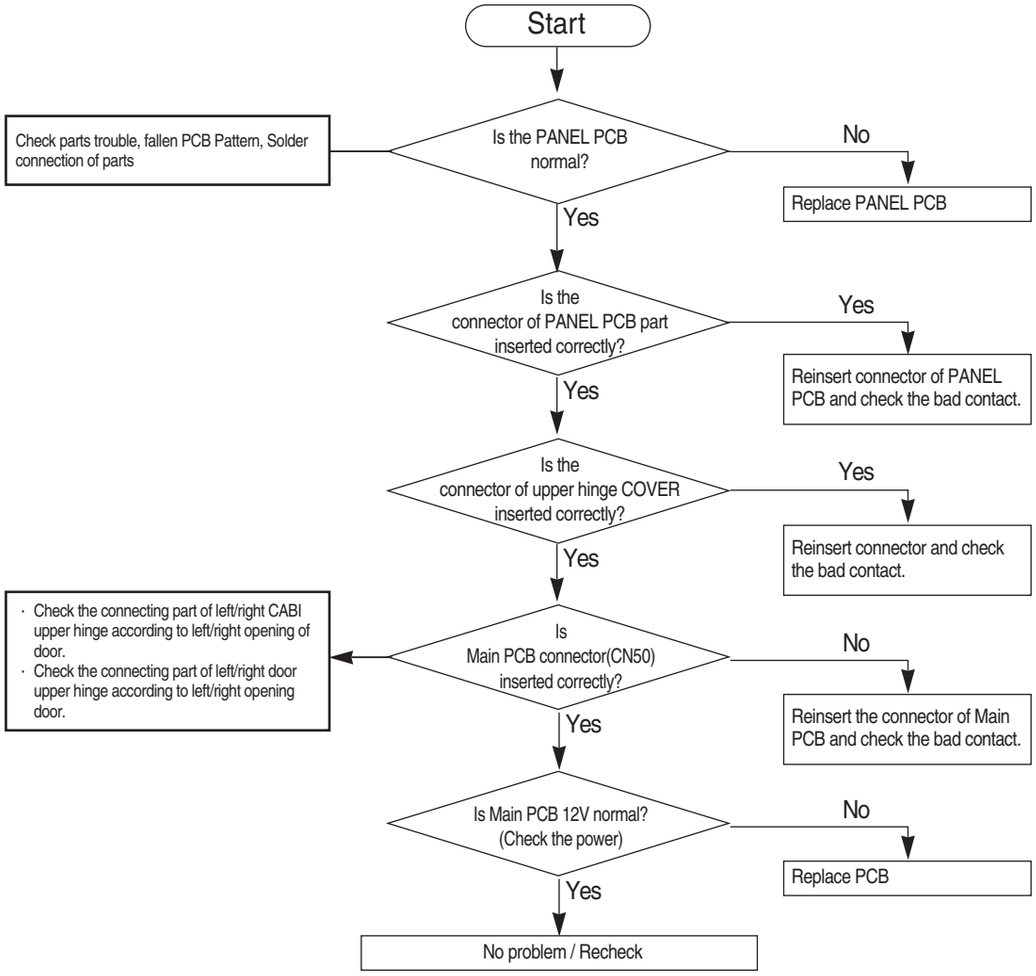

① Door Part - Check the connecting wire of upper hinge Panel - Check the disconnection & short between wires.
② Freezer upper CABI - Check the wires between Main PCB - Check the disconnection & short between wires.

TROUBLESHOOTING

② If Panel PCB Key is not selected

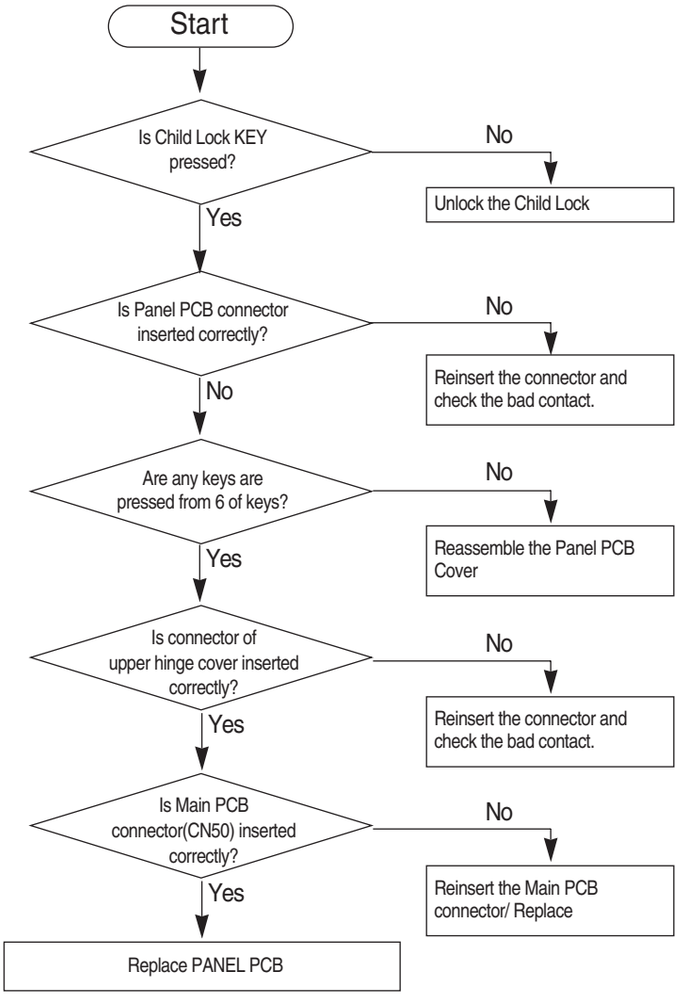

NW-미주향-AC 2010.6.83:48PM 페이지58 in

4-2-11. If refrigerator Room Lamp does not light up (F,R - Same condition)

1. When you replace the lamp of freezer/fridge, please power off/unplug AC Cord to avoid an electric shock.
2. Please keep in mind you could get burnt by the excessive heating of an incandescent light bulb.
3. Bimetal is installed in the refrigerator Lamp. Check that if Lamp may be OFF by bimetal. (It may be deleted per model.)

① When lightning of Panel PCB is disabled

Door & MICOM State		
Door	F MICOM(#60)	R MICOM(#52)
Close	0V(Low)	0V(Low)
Open	5V(High)	5V(High)

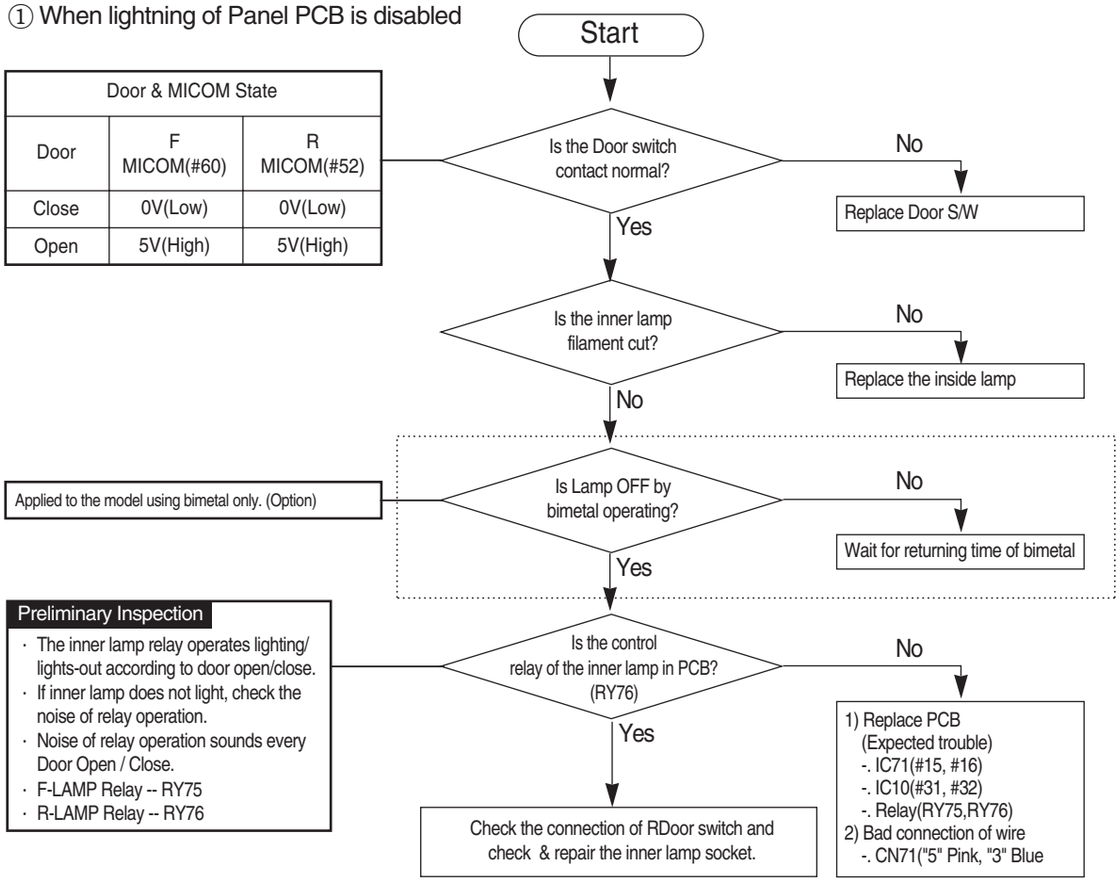

Preliminary Inspection

If the door is opened, the contact of door switch will be opened and MICOM will get applied 5V and finally it senses the door open.
If it sense 5V for more 2 minutes afterward, Door-open alarm will sound "Ding-Dong" for 10 seconds in 1 minute cycle.
Therefore,if the door switch has failure, the refrigerator can make a "Ding-Dong" sound per 1minute cycle. Please refer this for its service.

☞ When measure the lamp resistance to the wire, → Resistance can be changed by Lamp input voltage.
(Below is the actual measurement and the valued can be changed by function.)

☞ Fridge Lamp(Option)
CN72-#9(Red) ↔ CN71#3(Blue)
; 27Ohm± 10%
Lamp ; 40W (Basis on 120V)

☞ Freeze Lamp
CN72-#9(Red) ↔ CN71#5(Pink)
; 25Ohm± 10%
Lamp ; 40W(Basis on120V)

☞ Checking method of Door Switch voltage
-. PCB common Ground REG1 Heater Sink and
CN30-"2"(Brown) : measure the voltage (R Door Switch)
CN30-"1"(Black) : measure the voltage (F Door Switch)
=> See the R DOOR Switch at the following picture

CLOSE

OPEN

Common PCB Ground
REG1 Heater Sink

NW-미주향-AC 2010.6.83:48PM 페이지59 in

4-2-12. No water supply to the ice maker.

Preliminary Inspection

1. Water supplies directly to water valve. Please shut off the water supplying prior to repair.
2. Power is applied to the one end of wires. Be careful when disassembling not to get an electric shock.
3. To check the Ice Water Valve operation, shall press the Ice Maker Test switch and then check the operation. (Ice Maker in freezer)

Common PCB Ground
REG1 Heater Sink

☞ Checking method of voltage
Based on PCB common Ground REG1 Heater Sink
1) Check the voltage of IC71 #5 (Same voltage as IC10 #30)
-.when Ice Water valve operating (About 5V±0.5V)

Based on PCB common Ground REG1 Heater Sink
2) IC71 #14 voltage
-.When Ice Water valve waiting (About 12V±0.7V)
-.When Ice Water valve waiting (About 0.7V±0.5V)

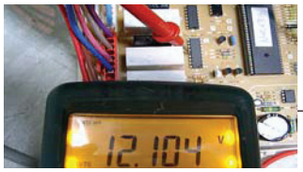

3) Check the voltage of Ice Water Valve operation (AC Voltage)
=> For checking Relay RY74 operation.
CN72-#9(Red) ↔ CN71-#9(Purple)
-.When Ice Water valve waiting (About AC 0V)

-.When Ice Water valve operating (About AC 115V± 20%)

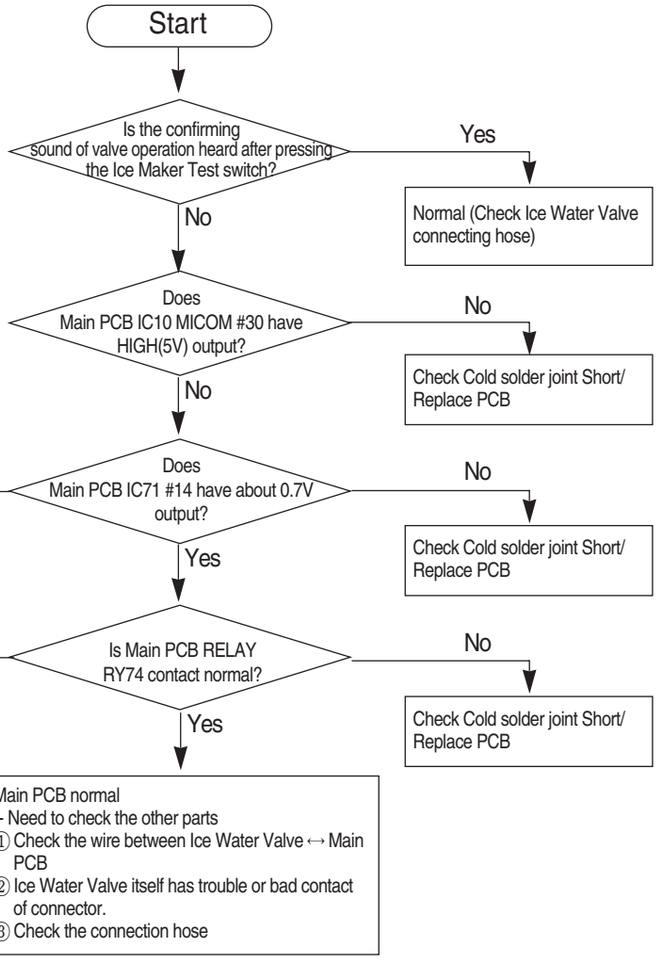

NW-미주향-AC 2010.6.83:48PM 페이지60 in

4-2-13. If refrigerator ROOM Lamp does not light up (F,R - Same condition) - LED

1. When you replace the lamp of freezer/fridge, please power OFF
   [Explain cold-storage room lamp on the basis of.]

① When lightning of Panel PCB is disabled

Door & MICOM State		
Door	F MICOM(#60)	R MICOM(#52)
Close	0V(Low)	0V(Low)
Open	5V(High)	5V(High)

MICOM(LAMP) State		
Door	F MICOM(#31)	R MICOM(#32)
Close	0V(Low)	0V(Low)
Open	5V(High)	5V(High)

IC71 State	
MICOM (#31/ #32)	IC71 output (#15/ #16)
0V(Low)	12V(High)
5V(High)	0V(Low)

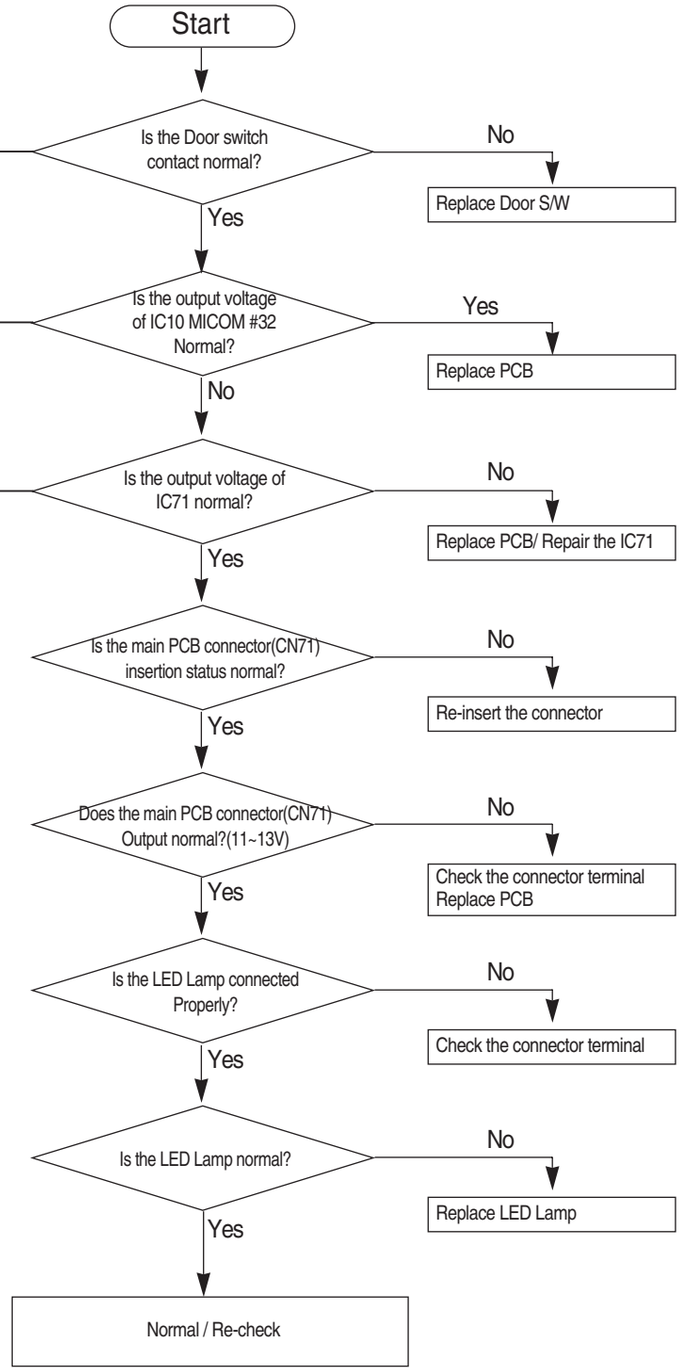

☞ Output voltage checking method
-. PCB common Ground REG1 Heater Sink and
CN71-"5"(Pink) : measure the voltage (F LED Lamp)
CN71-"3"(Blue) : measure the voltage (R LED Lamp)
=> Picture is R LED Lamp operation below.

CLOSE

OPEN

Common PCB Ground REG1 Heater Sink

☞ Checking method of Door Switch voltage
-. PCB common Ground REG1 Heater Sink and
CN30-"2"(Brown) : measure the voltage (R Door Switch)
CN30-"1"(Black) : measure the voltage (F Door Switch)
=> See the R DOOR Switch at the following picture

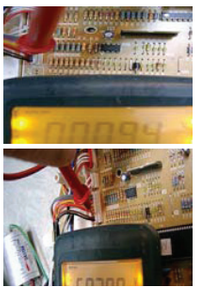

CLOSE

OPEN

Common PCB Ground REG1 Heater Sink

5 . EXPLODED VIEW & PARTS LIST

5-1) Freezer

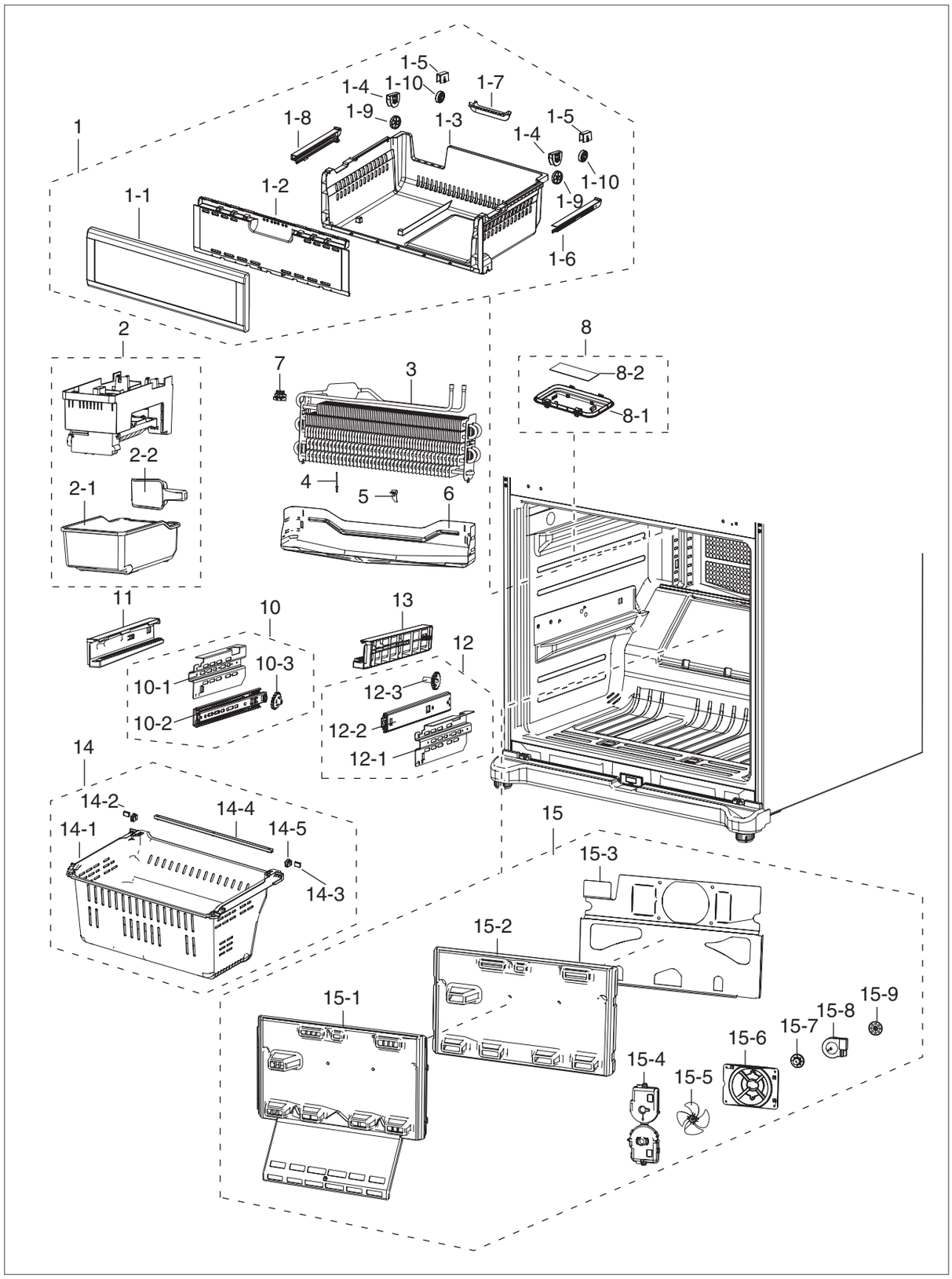

EXPLODED VIEW & PARTS LIST

■ Parts List of Freezer (RB217AC)

NO	CODE-NO	PART NAME	SPEC	QUANTITY	REMARK
1	DA97-08338A	ASSY TRAY-FRE UPP	NW2-FDR,21cu.ft	1	
1-1	DA63-04455A	COVER-TRAY FRE UPP A	NW2-PJT,HIPS,-,-,-,-,-,COOL WHT,-	1	
1-2	DA63-04456A	COVER-TRAY FRE UPP B	NW2-PJT,GPPS,-,-,-,-,-,-,-	1	
1-3	DA63-05359A	TRAY-FRE UPP	NW2-FDR,HIPS,COOL WHITE(SC-02740R),21cu.ft	1	
1-4	DA61-04154A	FIXER-ROLLER TRAY FRE UPP	AW-PJT,POM,1.8,NATURAL,-	2	
1-9	DA66-00554A	ROLLER-TRAY FRE UPP	AW-PJT,POM,42.2,-,NATURAL,-,PVC COATING	2	
1-5	DA66-10104A	ROLLER-FRE	POM,-,-,D22,-,-,	2	
1-10	DA71-20145A	FIXER-ROLLER	-,PA,--,-	2	
1-6	DA61-05185A	GUIDE-TRAY FRE UPP R	AW2 CD,PA+ABS,COOL WHITE(SC-02740R)	1	
1-7	DA63-05184A	COVER-ICE	AW2-CD,LDPE,NTR	1	
1-8	DA61-05186A	GUIDE-TRAY FRE UPP L	AW2 CD,PA+ABS,COOL WHITE(SC-02740R)	1	
2	DA90-04793A	ASSY ICE MAKER	NW2,AUTO ICE MAKER,-,-,-,-	1	RM001
2-1	DA61-03189A	CASE-ICE CUBE	AW-PJT,PP,-,-,-,COOL WHITE,-	1	RM012
2-2	DA67-01231A	SCOOP ICE	W2-PJT(05),PP(BJ-703T4),-,-,SC-02740R,-	1	RI247
3	DA96-00480A	ASSY EVAP-FRE	NW2-PJT,-,-,-,-,-,-,115V/240W,-	1	RF011
4	DA60-90005A	RIVET-AVEX	AL,D3.2,L9.83,-,-	1	
5	DA61-02901A	FIXER-SENSOR EVAP	CORE-PJT,PP,-,NTR,-	1	RI157
6	DA61-04462A	PLATE-DRAIN FRE	NW2-PJT,GALVANUME,T0.3,-,516,-,-	1	RF026
7	DA47-00243C	THERMO BIMETAL-PROTECTOR	AW-PJT(R),BT-121-M, PW-5M1N	1	RI074
8	DA97-08607A	ASSY COVER-LAMP FRE	NW2 FDR	1	
8-1	DA63-04955A	COVER-LAMP FRE	AW2 CD,PC,-,-,-,-,-,NTR,-	1	
8-2	DA96-00398K	ASSY-LAMP LED	NW2 FDR,3chip 4EA	1	
10	DA97-06703B	ASSY RAIL-SLIDE LOW L	NW2-PJT,21Cu.ft	1	RI171
10-1	DA61-04464A	HANGER-RAIL LOW L	NW2-PJT,SECC1,T1.6,COOL WHT,-,-,-	1	RD094
10-2	DA61-04512B	RAIL-SLIDE LOW L	NW2-PJT,STAINLESS-STS430,431,21Cu.ft	1	RI184
10-3	DA66-00436A	GEAR-L	AW-PJT,POM,-,-,-,NTR,-,-,-	1	RI242
11	DA61-04507A	SUPPORT-RAIL LOW L	NW2-PJT,ABS,-,-,-,COOL WHT,21CU ft	1	
12	DA97-06702B	ASSY RAIL-SLIDE LOW R	NW2-PJT,21Cu.ft	1	RI173
12-1	DA61-04465A	HANGER-RAIL LOW R	NW2-PJT,SECC1,T1.6,COOL WHT,-,-,-	1	RD095
12-2	DA61-04513B	RAIL-SLIDE LOW R	NW2-PJT,STAINLESS-STS430,431,21Cu.ft	1	RI185
12-3	DA66-00435A	GEAR-L	AW-PJT,POM,-,-,-,NTR,-,-,-	1	RI242
13	DA61-04506A	SUPPORT-RAIL LOW R	NW2-PJT,ABS,-,-,-,COOL WHT,21CU ft	1	
14	DA97-08340B	ASSY TRAY-DRAWER BOX	NW2-FDR,COOL WHITE,21cu.ft	1	RI237
14-1	DA63-05361A	TRAY-DRAWER BOX	NW2-FDR,PP,COOL WHITE(SC-02740R),21cu.ft	1	
14-2	DA63-04313A	GROMMET-TRAY DRAWER BOX	AW2,SILICON,-,-,-,-,-,WHT,-	2	RF005
14-3	DA66-10104A	ROLLER-FRE	POM,-,-,D22,-,-,	2	RF005
14-4	DA61-06159A	REINF-DRAWER BOX	NW2-FDR,PO-SPHC,T2.0,BLACK	1	RI232
14-5	DA71-20145A	FIXER-ROLLER	-,PA,--,-	2	RF092
15	DA97-06657A	ASSY COVER-EVAP FRE	NW2-PJT,-,-,-,-,-,-,-,-	1	RF005
15-1	DA63-04444A	COVER-EVAP FRE	NW2-PJT,PP,-,-,-,-,-,COOL WHT,-	1	RF005
15-2	DA62-01942A	INSULATION-EVAP FRE	NW2-PJT,FOAM-PS,-,-,-,-,-,-,-	1	RI232
15-3	DA61-04461A	PLATE-INS EVAP FRE	NW2-PJT,GALVALUME,T0.3,-,-,-,-	1	RF092
15-4	DA63-01809A	COVER MOTOR-BLDC	BLDC-NEW,PP,NTR,-,-,-,-,-,BJ-730	1	RF083
15-5	DA31-00124A	FAN-AX100W4CC-T1	-,TD-PJT,ABS,-,-	1	RI085
15-6	DA61-03183A	CASE-MOTOR FRE	AW-PJT,BUBBLE PP,-,-,-,NTR,-	1	RF120
15-7	DA63-01808A	GROMMET-MOTOR,FRONT	BLDC,NBR,BLACK,-,-,-,-,-,H20	1	RO137
15-8	DA31-00146H	MOTOR BLDC	-,2950,-,DC12V,150mA,-,-,2.1W,-,-,-,-,-,-,-	1	RI089
15-9	DA63-01146A	GROMMET-MOTOR,REAR	A-TOP,NBR,-,-,-,ID6.5,OD42,BLK,BLDC	1	RO138

EXPLODED VIEW & PARTS LIST

■ Parts List of Freezer (RB197AC)

NO	CODE-NO	PART NAME	SPEC	QUANTITY	REMARK
1	DA97-08339A	ASSY TRAY-FRE UPP	NW2-FDR,19cu.ft	1	
1-1	DA63-04455A	COVER-TRAY FRE UPP A	NW2-PJT,HIPS,-,-,-,-,-,COOL WHT,-	1	
1-2	DA63-04456A	COVER-TRAY FRE UPP B	NW2-PJT,GPPS,-,-,-,-,-,-,-	1	
1-3	DA63-05360A	TRAY-FRE UPP	NW2-FDR,HIPS,COOL WHITE(SC-02740R),19cu.ft	1	
1-4	DA61-04154A	FIXER-ROLLER TRAY FRE UPP	AW-PJT,POM,1.8,NATURAL,-	2	
1-9	DA66-00554A	ROLLER-TRAY FRE UPP	AW-PJT,POM,42.2,-,NATURAL,-,PVC COATING	2	
1-5	DA66-10104A	ROLLER-FRE	POM,-,-,D22,-,-,	2	
1-10	DA71-20145A	FIXER-ROLLER	-,PA,--,-	2	
1-6	DA61-05185A	GUIDE-TRAY FRE UPP R	AW2 CD,PA+ABS,COOL WHITE(SC-02740R)	1	
1-7	DA63-05184A	COVER-ICE	AW2-CD,LDPE,NTR	1	
1-8	DA61-05186A	GUIDE-TRAY FRE UPP	AW2 CD,PA+ABS,COOL WHITE(SC-02740R)	1	
2	DA90-04793A	ASSY ICE MAKER	NW2,AUTO ICE MAKER,-,-,-,-	1	RM001
2-1	DA61-03189A	CASE-ICE CUBE	AW-PJT,PP,-,-,-,COOL WHITE,-	1	RM012
2-2	DA67-01231A	SCOOP ICE	W2-PJT(05),PP(BJ-703T4),-,-,SC-02740R,-	1	RI247
3	DA96-00480A	ASSY EVAP-FRE	NW2-PJT,-,-,-,-,-,-,115V/240W,-	1	RF011
4	DA60-90005A	RIVET-AVEX	AL,D3.2,L9.83,-,-	1	
5	DA61-02901A	FIXER-SENSOR EVAP	CORE-PJT,PP,-,NTR,-	1	RI157
6	DA61-04462A	PLATE-DRAIN FRE	NW2-PJT,GALVANUME,T0.3,-,516,-,-	1	RF026
7	DA47-00243C	THERMO BIMETAL-PROTECTOR	AW-PJT(R),BT-121-M, PW-5M1N	1	RI074
8	DA97-08607A	ASSY COVER-LAMP FRE	NW2 FDR	1	
8-1	DA63-04955A	COVER-LAMP FRE	AW2 CD,PC,-,-,-,-,-,NTR,-	1	
8-2	DA96-00398K	ASSY-LAMP LED	NW2 FDR,3chip 4EA	1	
10	DA97-06720B	ASSY RAIL-SLIDE LOW L	NW2,19cu.ft	1	RI171
10-1	DA61-04464A	HANGER-RAIL LOW L	NW2-PJT,SECC1,T1.6,COOL WHT,-,-,-	1	RD094
10-2	DA61-04516B	RAIL-SLIDE LOW L	NW2,STAINLESS-STS430,19cu.ft	1	RI184
10-3	DA66-00436A	GEAR-L	AW-PJT,POM,-,-,-,NTR,-,-,-	1	RI242
11	DA61-04508A	SUPPORT-RAIL LOW L	NW2-PJT,ABS,-,-,-,COOL WHT,19CU ft	1	
12	DA97-06718B	ASSY RAIL-SLIDE LOW R	NW2,19cu.ft	1	RI173
12-1	DA61-04465A	HANGER-RAIL LOW R	NW2-PJT,SECC1,T1.6,COOL WHT,-,-,-	1	RD095
12-2	DA61-04515B	RAIL-SLIDE LOW R	NW2,STAINLESS-STS430,19cu.ft	1	RI185
12-3	DA66-00436A	GEAR-L	AW-PJT,POM,-,-,-,NTR,-,-,-	1	RI242
13	DA61-04509A	SUPPORT-RAIL LOW R	NW2-PJT,ABS,-,-,-,COOL WHT,19CU ft	1	
14	DA97-08341A	ASSY TRAY-DRAWER BOX	NW2-FDR,COOL WHITE,19cu.ft	1	RI237
14-1	DA63-05362A	TRAY-DRAWER BOX	NW2-FDR,PP,COOL WHITE(SC-02740R),19cu.ft	1	
14-2	DA63-04313A	GROMMET-TRAY DRAWER BOX	AW2,SILICON,,-,-,-,-,WHT,-	2	
14-3	DA66-10104A	ROLLER-FRE	POM,-,-,D22,-,-,	2	
14-4	DA61-06159A	REINF-DRAWER BOX	NW2-FDR,PO-SPHC,T2.0,BLACK	1	
14-5	DA71-20145A	FIXER-ROLLER	-,PA,--,-	2	
15	DA97-06657A	ASSY COVER-EVAP FRE	NW2-PJT,-,-,-,-,-,-,-,-	1	RF005
15-1	DA63-04444A	COVER-EVAP FRE	NW2-PJT,PP,-,-,-,-,-,COOL WHT,-	1	RF005
15-2	DA62-01942A	INSULATION-EVAP FRE	NW2-PJT,FOAM-PS,-,-,-,-,-,-,-	1	RI232
15-3	DA61-04461A	PLATE-INS EVAP FRE	NW2-PJT,GALVALUME,T0.3,-,-,-,-	1	RF092
15-4	DA63-01809A	COVER MOTOR-BLDC	BLDC-NEW,PP,NTR,-,-,-,-,-,BJ-730	1	RF083
15-5	DA31-00124A	FAN-AX100W4CC-T1	-,TD-PJT,ABS,-,-	1	RI085
15-6	DA61-03183A	CASE-MOTOR FRE	AW-PJT,BUBBLE PP,-,-,-,NTR,-	1	RF120
15-7	DA63-01808A	GROMMET-MOTOR,FRONT	BLDC,NBR,BLACK,-,-,-,-,-,H20	1	RO137
15-8	DA31-00146H	MOTOR BLDC	-,2950,-,DC12V,150mA,-,-,2.1W,-,-,-,-,-,-,-	1	RI089
15-9	DA63-01146A	GROMMET-MOTOR,REAR	A-TOP,NBR,-,-,-,ID6.5,OD42,BLK,BLDC	1	RO138

EXPLODED VIEW & PARTS LIST

5-2) Refrigerator

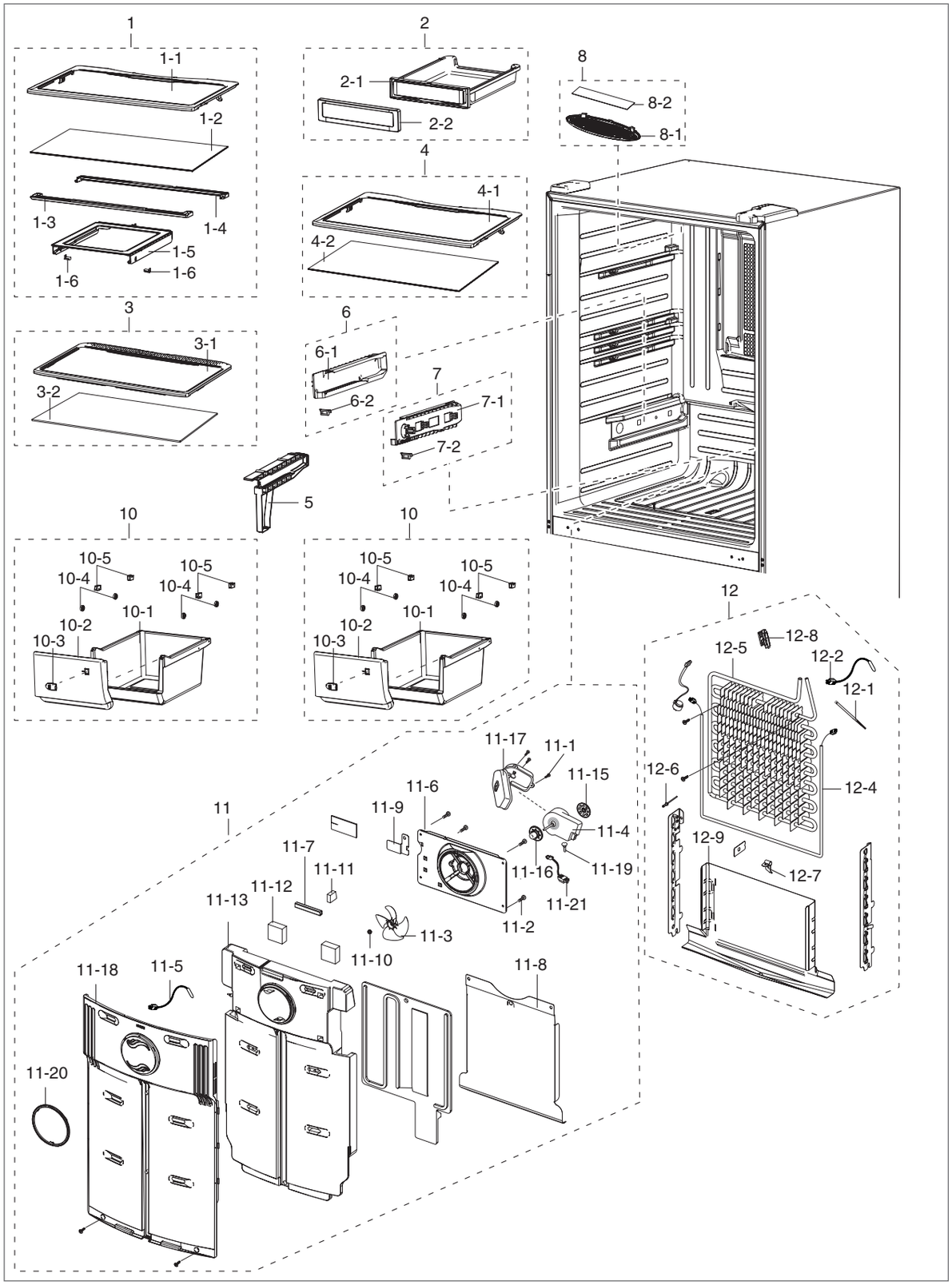

EXPLODED VIEW & PARTS LIST

■ Parts List of Refrigerator (RB217AC)

NO	CODE-NO	PART NAME	SPEC	QUANTITY	REMARK
1	DA97-06686A	ASSY SHELF-REF UPP	NW2,19cu.ft	1	RI041
1-1	DA64-02645A	TRIM SHELF-REF	NW2,HIPS,-,-,-,COOL WHITE,21cu.ft	1	RI079
1-2	DA64-02647A	GLASS-SHELF	NW2,GLASS,T4.0,-,-,-,-,-	1	RI037
1-3	DA61-04511A	SUPPORT-GUIDE RAIL FRONT	NW2,HIPS,-,-,-,COOL WHITE,-	1	
1-4	DA61-04510A	SUPPORT-GUIDE RAIL REAR	NW2,HIPS,-,-,-,COOL WHITE,-	1	
1-5	DA61-04505A	GUIDE-RAIL	NW2,HIPS,-,-,-,COOL WHITE,-	1	
1-6	DA63-00202A	GROMMET-RAIL	-,NY-6,-,-,-,-,-,-,-	2	RI088
2	DA97-06674A	ASSY TRAY-CHILLED ROOM	NW2,-,-,-,-,19cu.ft	1	RI018
2-1	DA63-04464A	TRAY CHIL ROOM	NW2,GPPS,-,-,-,-,-,-	1	RI018
2-2	DA63-04465A	COVER-TRAY CHIL ROOM	NW2,HIPS,-,-,-,-,-,COOL WHITE,-	1	
3	DA97-06675A	ASSY SHELF-TRIM REF MID	NW2,-	1	
3-1	DA64-02645A	TRIM SHELF-REF	NW2,HIPS,-,-,-,COOL WHITE,21cu.ft	1	RI079
3-2	DA64-02647A	GLASS-SHELF	NW2,GLASS,T4.0,-,-,-,-,-	1	RI037
4	DA97-00663H	ASSY COVER-VEG	W2-PJT(55), ABS+SHELF,GLASS(T5.0),cool white	1	RI997
4-1	DA64-00448B	TRIM-COVER VEG	W2-PJT(55),ABS,-,T2.5,L403,W717,cool white	1	RI091
4-2	DA67-01807H	SHELF-GLASS	W2-PJT(55), GLASS,T5,W708.5,L346,-,COVER-VEG	1	RF183
5	DA61-00760B	RAIL-VEG, MID	W2-PJT(55),ABS,T2.5,-,-,COOL-WHITE,SC-02740R	1	RI030
6	DA97-00103N	ASSY RAIL-VEG, L	W2-PJT,ABS,L341.5,SC-02740R,cool white,-	1	RI028
6-1	DA61-60126E	RAIL-VEG	W2-PJT,ABS,T3.0,-,LEFT,COOL-WHITE,SC-02740R	1	RI028
6-2	DA63-40006A	GROMMET	RAIL,NY-6,-,-,-,-,-,-,RAIL	1	RW374
7	DA97-00103P	ASSY RAIL-VEG, R	W2-PJT,ABS,L341.5,SC-02740R,cool white,-	1	RI029
7-1	DA61-60127E	RAIL-VEG	W2-PJT,ABS,T3.0,-,RIGHT,COOL-WHITE,SC-02740R	1	RI028
7-2	DA63-40006A	GROMMET	RAIL,NY-6,-,-,-,-,-,-,RAIL	1	RW374
8	DA97-08606A	ASSY COVER-LAMP REF	RAIL,NY-6,-,-,-,-,-,-,RAIL	1	
8-1	DA63-05430A	COVER LAMP-REF	W2-PJT,ABS,L341.5,SC-02740R,cool white,-	1	
8-2	DA96-00398F	ASSY-LAMP LED	W2-PJT,ABS,T3.0,-,RIGHT,COOL-WHITE,SC-	1	
10	DA97-06700A	ASSY CASE-VEG REF	NW2-PJT,-,-,-,-,-	2	RI999
10-1	DA61-00762A	CASE-VEG,REF	W2-PJT(55),HIPS,-,-,-,WHITE,HG-1760	1	RI999
10-2	DA63-04445A	COVER-VEG REF	NW2-PJT,SAN,-,-,-,-,-,NATURAL,-	1	RI010
10-3	DA64-00656A	KNOB-HUMIDITY	W2-PJT,ABS,-,-,-,-,W9540,-,BEST BYE	1	RW508
10-4	DA66-10104A	ROLLER-FRE	POM,-,-,D22,-,-	4	RW648
10-5	DA71-20145A	FIXER-ROLLER	-,PA,--,-	4	RH029
11	DA96-00365E	ASSY EVAP-REF	AW-PJT(265,266),-,-,-,115V/120W,-,-,-,-	1	
11-1	6002-000213	SCREW-TAPPING	TH,+,-,1,M4,L12,ZPC(WHT),SWRCH18A,-	3	RS047
11-2	6002-000215	SCREW-TAPPING	TH,+,-,1,M4.0,L16,ZPC(WHT),SWRCH18A,-	4	RS080
11-3	DA31-00124A	FAN-AX100W4CC-T1	-,TD-PJT,ABS,-,-	1	RI085
11-4	DA31-00146H	MOTOR BLDC	2950,-,DC12V,150mA,-,-,2.1W,-,-,-,-,-,-,-	1	RI089
11-5	DA32-10105X	SENSOR TEMP	PX-41C,QUEEN PJT,-10,5V,-,-,F-SENSOR,YELLOW	1	RQ684
11-6	DA61-03181A	CASE-MOTOR REF	AW-PJT,BUBBLE PP,-,-,-,NTR,-	1	RF121
11-7	DA61-03182A	GUIDE-INS EVAP REF	AW-PJT,ABS,-,-,-,NTR,-	1	RI210
11-8	DA61-03186A	PLATE-INS EVAP REF	AW-PJT,GALVANUME,T0.4,-,-,-,-	1	
11-9	DA61-03599A	PLATE-HOUSING REF	AW-PJT,GALVALUME,T0.3,-,-,-,-	1	RI307
11-10	DA61-20128A	SPRING ETC-FAN	-,STS304,PI7.8,-,OD1.0,-,-,-,-,-,FD	1	RW716
11-11	DA62-01383A	INSULATION-EVAP SUB	AW-PJT,FOAM-PS,-,-,-,-,-,-,-	1	RI232
11-12	DA62-01423A	INSULATION-EVAP DUCT	AW-PJT,FOAM-PS,T20,W44.5,L45,-,-,-,-	2	RI236
11-13	DA62-01941A	INSULATION-EVAP REF	NW2-PJT,FOAM-PS,-,-,-,-,-,-,-	1	RI231
11-14	DA62-01969A	INSULATION-EVAP REAR	NW2-PJT,FOAM-PS,-,-,-,-,-,-,-	1	RI233
11-15	DA63-01146A	GROMMET-MOTOR,REAR	A-TOP,NBR,-,-,-,ID6.5,OD42,BLK,BLDC	1	RO138
11-16	DA63-01808A	GROMMET-MOTOR,FRONT	BLDC,NBR,BLACK,-,-,-,-,-,H20	1	RO137
11-17	DA63-01809A	COVER MOTOR-BLDC	BLDC-NEW,PP,NTR,-,-,-,-,-,BJ-730	1	RF083
11-18	DA63-04439A	COVER-EVAP REF	NW2-PJT,PP,-,-,-,-,-,COOL WHT,-	1	RI024
11-19	DA63-40167A	GROMMET-COVER CHIL	T3.0,SILICON,-,-,-,-,-,-,NTR	1	RI087

EXPLODED VIEW & PARTS LIST

■ Parts List of Refrigerator (RB217AC)

NO	CODE-NO	PART NAME	SPEC	QUANTITY	REMARK
11-20	DA64-02065A	TRIM-COVER EVAP REF	AW-PJT,ABS,-,-,-,COOL WHITE,-	1	RI241
11-21	DA96-00042J	ASSY-HARNESS MOTOR	AW-PJT,R-Fan/ F-Fan	1	
12	DA96-00365E	ASSY EVAP-REF	AW-PJT(265,266),-,-,-,115V/120W,-,-,-,-	4	
12-1	6501-000123	CABLE TIE	DACT-140,-,W3.6,L146,NTR,NYLON66	1	RO101
12-2	DA32-00027B	SENSOR TEMP	502AT,AW-PJT,-40~110°,5V,-,-,R-DEF-SENSOR	1	
12-3	DA47-00243S	THERMO BIMETAL-PROTECTOR	AW-PJT(R),BT-121-M, PW-5M1N,125 / 250V,10	1	
12-4	DA47-00244D	HEATER-METAL SHEATH	AW-PJT,-,120W,-,115V,110.2βY,R-ROOM	1	
12-5	DA59-00357B	EVAP REF	-,-,-,-,-,-,-,-,AW-PJT,-	1	RI016
12-6	DA60-90005A	RIVET-AVEX	AL,D3.2,L9.83,-,-	1	
12-7	DA61-03644A	PLATE-EVAP HEATER	AW-PJT,AL,T0.7,-,-,-,-	1	RF170
12-8	DA61-03683A	FIXER-SENSER	AW-PJT,ABS,-,NTR,-	1	RM017
12-9	DA61-04148A	PLATE-DRAIN REF	AW-PJT('08),GALVANUME,T0.3,-,-,-,-		RF026

EXPLODED VIEW & PARTS LIST

■ Parts List of Refrigerator (RB197AC)

NO	CODE-NO	PART NAME	SPEC	QUANTITY	REMARK
1	DA90-04893C	ASSY SHELF-REF UPP	RB197,PLATINUM INOX,-,-,-,-,-,-	1	
1-1	DA64-02644A	TRIM SHELF-REF	NW2,HIPS,-,-,-,COOL WHITE,19cu.ft	1	RI079
1-2	DA64-02646A	GLASS-SHELF	NW2,GLASS,T4.0,-,-,-,-	1	RI037
1-3	DA61-04511A	SUPPORT-GUIDE RAIL FRONT	NW2,HIPS,-,-,-,COOL WHITE,-	1	
1-4	DA61-04510A	SUPPORT-GUIDE RAIL REAR	NW2,HIPS,-,-,-,COOL WHITE,-	1	
1-5	DA61-04503A	GUIDE-RAIL	NW2,HIPS,-,-,-,COOLWHITE,19cu.ft	1	
1-6	DA63-00202A	GROMMET-RAIL	-,NY-6,-,-,-,-,-,-	2	RI088
2	DA97-06677A	ASSY TRAY-CHILLED ROOM	NW2,-,-,-,-,19cu.ft	1	RI018
2-1	DA63-04463A	TRAY CHIL ROOM	NW2,GPPS,-,-,-,-,-,19cu.ft	1	RI018
2-2	DA63-04465A	COVER-TRAY CHIL ROOM	NW2,HIPS,-,-,-,-,-,COOL WHITE,-	1	
3	DA97-06687A	ASSY SHELF-TRIM REF MID	NW2,19cu.ft	1	RI040
3-1	DA64-02644A	TRIM SHELF-REF	NW2,HIPS,-,-,-,COOL WHITE,19cu.ft	1	RI079
3-2	DA64-02646A	GLASS-SHELF	NW2,GLASS,-,-,-,-,-,19cu.ft	1	RI037
4	DA97-00663G	ASSY COVER-VEG	W2-PJT, ABS+SHELF,GLASS(T5.0), SC-02740R, cool white	1	RI997
4-1	DA64-00449B	TRIM-COVER VEG	W2-PJT,ABS,-,T2.5,SC-02740R,cool white,-	1	RI091
4-2	DA67-01807G	SHELF-GLASS	W2-PJT(50), GLASS, T5, W708.5, L296,-, COVER-VEG(50)	1	RF183
5	DA61-00761B	RAIL-VEG, MID	W2-PJT,ABS,T2.5,-,-,COOL-WHITE,SC-02740R	1	RI030
6	DA97-00103N	ASSY RAIL-VEG, L	W2-PJT,ABS,L341.5,SC-02740R,cool white,-	1	RI028
6-1	DA61-60126E	RAIL-VEG	W2-PJT,ABS,T3.0,-,LEFT,COOL-WHITE,SC-02740R	1	RI028
6-2	DA63-40006A	GROMMET	RAIL,NY-6,-,-,-,-,-,-,RAIL	1	RW374
7	DA97-00103P	ASSY RAIL-VEG, R	W2-PJT,ABS,L341.5,SC-02740R,cool white,-	1	RI029
7-1	DA61-60127E	RAIL-VEG	W2-PJT,ABS,T3.0,-,RIGHT,COOL-WHITE,SC-02740R	1	RI028
7-2	DA63-40006A	GROMMET	RAIL,NY-6,-,-,-,-,-,-,RAIL	1	RW374
8	DA97-08606A	ASSY COVER-LAMP REF	RAIL,NY-6,-,-,-,-,-,-,RAIL	1	
8-1	DA63-05430A	COVER LAMP-REF	W2-PJT,ABS,L341.5,SC-02740R,cool white,-	1	
8-2	DA96-00398F	ASSY-LAMP LED	W2-PJT,ABS,T3.0,-,RIGHT,COOL-WHITE,SC-	1	
10	DA97-06725A	ASSY CASE-VEG REF	NW2,-,-,-,19cu.ft,-	2	RI998
10-1	DA61-00759B	CASE-VEG,REF	W2-PJT,HIPS,-,SC-02740R,-,COOL-WHITE,-	1	RI998
10-2	DA63-04445A	COVER-VEG REF	NW2-PJT,SAN,-,-,-,-,-,NATURAL,-	1	RI010
10-3	DA64-00656A	KNOB-HUMIDITY	W2-PJT,ABS,-,-,-,-,W9540,-,BEST BYE	1	RW508
10-4	DA66-10104A	ROLLER-FRE	POM,-,-,D22,-,-,	4	RW648
10-5	DA71-20145A	FIXER-ROLLER	-,PA,--,-	4	RH029
11	DA96-00365E	ASSY EVAP-REF	AW-PJT(265,266),-,-,-,115V/120W,-,-,-,-	1	
11-1	6002-000213	SCREW-TAPPING	TH,+,-,1,M4,L12,ZPC(WHT),SWRCH18A,-	3	RS047
11-2	6002-000215	SCREW-TAPPING	TH,+,-,1,M4.0,L16,ZPC(WHT),SWRCH18A,-	4	RS080
11-3	DA31-00124A	FAN-AX100W4CC-T1	-,TD-PJT,ABS,-,-	1	RI085
11-4	DA31-00146H	MOTOR BLDC	2950,-,DC12V,150mA,-,-,2.1W,-,-,-,-,-,-,-	1	RI089
11-5	DA32-10105X	SENSOR TEMP	PX-41C,QUEEN PJT,-10,5V,-,-,F-SENSOR,YELLOW	1	RQ684
11-6	DA61-03181A	CASE-MOTOR REF	AW-PJT,BUBBLE PP,-,-,-,NTR,-	1	RF121
11-7	DA61-03182A	GUIDE-INS EVAP REF	AW-PJT,ABS,-,-,-,NTR,-	1	RI210
11-8	DA61-03186A	PLATE-INS EVAP REF	AW-PJT,GALVANUME,T0.4,-,-,-,-	1	
11-9	DA61-03599A	PLATE-HOUSING REF	AW-PJT,GALVALUME,T0.3,-,-,-,-	1	RI307
11-10	DA61-20128A	SPRING ETC-FAN	-,STS304,PI7.8,-,OD1.0,-,-,-,-,-,FD	1	RW716
11-11	DA62-01383A	INSULATION-EVAP SUB	AW-PJT,FOAM-PS,-,-,-,-,-,-,-	1	RI232
11-12	DA62-01423A	INSULATION-EVAP DUCT	AW-PJT,FOAM-PS,T20,W44.5,L45,-,-,-,-	2	RI236
11-13	DA62-01941A	INSULATION-EVAP REF	NW2-PJT,FOAM-PS,-,-,-,-,-,-,-	1	RI231
11-14	DA62-01969A	INSULATION-EVAP REAR	NW2-PJT,FOAM-PS,-,-,-,-,-,-,-	1	RI233
11-15	DA63-01146A	GROMMET-MOTOR,REAR	A-TOP,NBR,-,-,-,ID6.5,OD42,BLK,BLDC	1	RO138
11-16	DA63-01808A	GROMMET-MOTOR,FRONT	BLDC,NBR,BLACK,-,-,-,-,-,H20	1	RO137
11-17	DA63-01809A	COVER MOTOR-BLDC	BLDC-NEW,PP,NTR,-,-,-,-,-,BJ-730	1	RF083
11-18	DA63-04439A	COVER-EVAP REF	NW2-PJT,PP,-,-,-,-,-,COOL WHT,-	1	RI024
11-19	DA63-40167A	GROMMET-COVER CHIL	T3.0,SILICON,-,-,-,-,-,-,NTR	1	RI087

EXPLODED VIEW & PARTS LIST

■ Parts List of Refrigerator (RB197AC)

NO	CODE-NO	PART NAME	SPEC	QUANTITY	REMARK
11-20	DA64-02065A	TRIM-COVER EVAP REF	AW-PJT,ABS,-,-,-,COOL WHITE,-	1	RI241
11-21	DA96-00042J	ASSY-HARNESS MOTOR	AW-PJT,R-Fan/ F-Fan	1	
12	DA96-00365E	ASSY EVAP-REF	AW-PJT(265,266),-,-,-,115V/120W,-,-,-,-	4	
12-1	6501-000123	CABLE TIE	DACT-140,-,W3.6,L146,NTR,NYLON66	1	RO101
12-2	DA32-00027B	SENSOR TEMP	502AT,AW-PJT,-40~110°C,5V,-,-,R-DEF-SENSOR	1	
12-3	DA47-00243S	THERMO BIMETAL-PROTECTOR	AW-PJT(R),BT-121-M, PW-5M1N,125 / 250V,10	1	
12-4	DA47-00244D	HEATER-METAL SHEATH	AW-PJT,-,120W,-,115V,110.2βY,-,-,R-ROOM	1	
12-5	DA59-00357B	EVAP REF	-,-,-,-,-,-,-,-,AW-PJT,-	1	RI016
12-6	DA60-90005A	RIVET-AVEX	AL,D3.2,L9.83,-,-	1	
12-7	DA61-03644A	PLATE-EVAP HEATER	AW-PJT,AL,T0.7,-,-,-,-	1	RF170
12-8	DA61-03683A	FIXER-SENSER	AW-PJT,ABS,-,NTR,-	1	RM017
12-9	DA61-04148A	PLATE-DRAIN REF	AW-PJT('08),GALVANUME,T0.3,-,-,-,-		RF026

EXPLODED VIEW & PARTS LIST

5-3) Cabinet

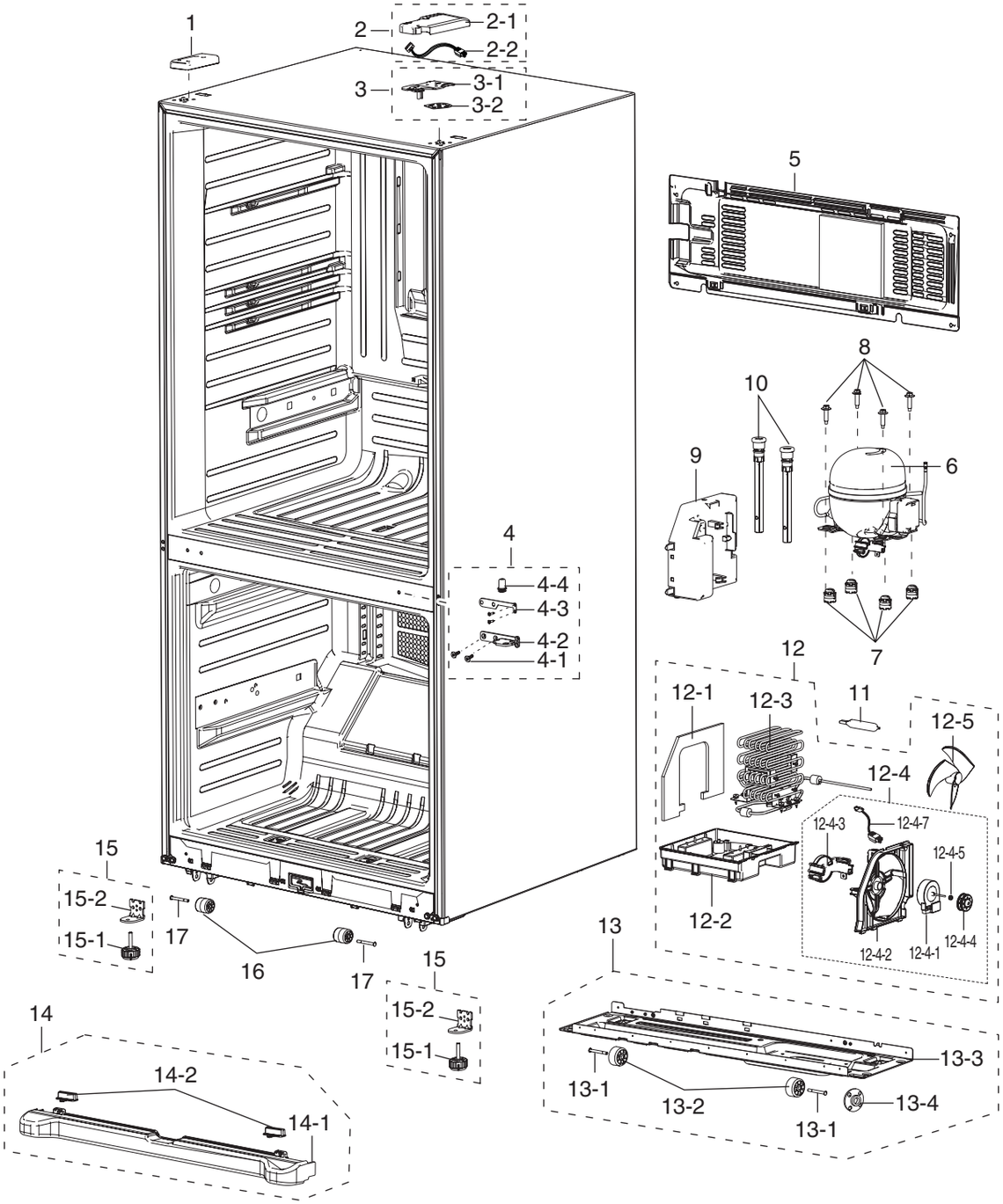

EXPLODED VIEW & PARTS LIST

■ Parts List of Cabinet (RB217AC)

NO	CODE-NO	PART NAME	SPEC	QUANTITY	REMARK
1	DA63-02520A	COVER HINGE-UPP L	W2-PJT(05),ABS,-,-,-,-,-,SC-00477R,HG-0760H	1	
2	DA97-06705A	ASSY COVER HINGE-UPP R	NW2,ABS,-,-,-,-,-,Creamy STS(SC-07009R),-	1	RO045
2-1	DA63-04441A	COVER HINGE-UPP R	NW2-PJT,ABS,T2.0,-,-,-,-,Creamy STS(SC-07009R),-	1	RO045
2-2	DA34-00043C	SWITCH REED-ASS'Y	200VDC,1.5A,-	1	RO150
3	DA97-06716A	ASSY HINGE UPP-R	NW2,T3.0,-,-,-,-,-	1	RO042
3-1	DA61-04476A	HINGE-UPP R	NW2-PJT,SHP1,T3.0,-,-,-,-,-	1	RO128
3-2	DA63-02527A	SHIM HINGE-UPP	W2-PJT(05),HIPS,T1.0,-,-,-,-	1	RO067
4	DA97-06695A	ASSY HINGE-MID R	NW2,T4.5,-,-,-,-,-	1	
4-1	6009-001548	SCREW-SPECIAL	FH,HEX,-,M6,L20,ZPC3(WHT),SWRCH18(A),-,-	1	RQ747
4-2	DA61-04433B	HINGE-MID R	NW2,SHP1,T4.5,-,-,Ni-Cr Plated,-,DRAWER Type	1	RO123
4-3	DA63-03463A	SHIM-HINGE MID	AW-PJT,RD-PVC,T1.0,-,-,-,-	1	RO067
4-4	DA66-00611A	SHAFT HINGE-MID	NW2,SM45C,-,-,-,-,DRAWER	1	
5	DA97-00408E	ASSY COVER-COMP	W2-05,-,T0.35,-,-,-,-,-,-	1	
6	MK162DL1U/E09	COMPRESSOR	6.15CC,115/127V~60HZ,RSCR	1	RH002
7	DA63-02017A	GROMMET COMP	QUEEN,EPDM,-,-,-,-,-,BLACK,-	4	RH015
8	DA60-20008A	BOLT-HEX	S25C,M6,-,-,L42.6,WHITE,-,ZPC	4	RW074
9	DA63-01866A	COVER RELAY	NORYL,T2.0,-,-,-,SSEC,BLACK,HOOK	1	RH004
10	DA97-04049A	ASSY CAP-DRAIN	EPEL,ASSY,-,-,L224.5,-,SOFT-PVC	2	RZ110
11	DA62-01514A	DRYER	C1220T,OD18.70,L114,-,-,-	1	RH014
12	DA97-06698A	ASSY TRAY-DRAIN WATER	NW2,-,-,-,-,-	1	RH003
12-1	DA62-00954A	SEAL-SUB COND	W2-05,FOAM-PE,-,T7,-,-,-	1	RH030
12-2	DA63-04466A	TRAY DRAIN-WATER	NW2,PP,-,-,-,-,NTR,-	1	RH003
12-3	DA97-02791B	ASSY PIPE-SUB COND	NW2-PJT,-	1	RW005
12-4	DA97-03145L	ASSY SUPPORT-CIRCUIT MOTOR	AW2-PJT,-,-,-,-,1550RPM,2.7W	1	RO132
12-4-1	DA31-00146B	MOTOR BLDC	DRCP5030LA,1560,-,DC12V,230mA,-,-,2.7W,ATOP	1	RI089
12-4-2	DA61-02349B	SUPPORT-CIRCUIT MOTOR	NEXT,ABS,-,-,-,NTR,-	1	RF033
12-4-3	DA61-02355B	BRACKET-CIRCUIT MOTOR	ABS,NEXT,-,-,-,NTR,-	1	RH039
12-4-4	DA63-01146A	GROMMET-MOTOR,REAR	A-TOP,NBR,-,-,-,ID6.5,OD42,BLK,BLDC	1	RO138
12-4-5	DA63-40167A	GROMMET-COVER CHIL	SILICON,T3.0,-,L16,-,-,BLACK,-	1	RI087
12-4-6	DA96-00042A	ASSY-HARNESS MOTOR	A-TOP UL(MOTOR),C-FAN,350MM	1	RI133
12-5	DA31-00010D	FAN-ASS'Y	ET,ZIPEL,ASSY,-,UNIT,_150	1	RI085
13	DA97-06815A	ASSY CHASSIS COMP	NW2,T1.2,-,-,-,-	1	
13-1	DA60-90146A	PIN-CASTER	MSWR10,OD6.0,L40,ZPC2,SR-289-4	2	RH019
13-2	DA61-40126B	CASTER-REAR	REF-ALL,PP,-,PI 44,NTR,W22,-	2	RH011
13-3	DA64-02694A	CHASSIS COMP	NW2,SBHG1,T1.2,-,-,-,-	1	RO002
13-4	DA71-50240A	BRACKET-CABI	ALL,SBHG1,T1.6,-,-,-,-	1	
14	DA97-06673A	ASSY COVER LEG FRONT	NW2,-,-,-,-,-,-,CREAMY STS,-	1	RO003
14-1	DA63-04462A	COVER LEG-FRONT	NW2,PP,-,-,-,-,-,CREAMY STS,-	1	RO003
14-2	DA67-02071A	CAP LEG FRONT	NW2,PP,-,-,-,CREAMY STS,-	2	
15	DA97-06688A	ASSY SUPPORT-FOOT FRONT	NW2,-,-,-,-,-	2	
15-1	DA61-00805D	FOOT-FRONT	AW2-PJT,PP+MSWR10,-,BLACK,-,-,-	1	RO001
15-2	DA61-04490A	SUPPORT-FOOT FRONT	NW2,SHP1,T4.0,-,-,-,-	1	RO158
16	DA61-00176A	CASTER-FRONT	PP,-,OD40,NTR,-,-	2	RH009
17	DA60-90124A	RIVET	MSWR10,OD6.0,-,-,L56,-,-,-	2	RH012
18	DA97-06707A	ASSY VALVE WATER-HOSE	NW2,DISP,-,-,-	1	

EXPLODED VIEW & PARTS LIST

■ Parts List of Cabinet (RB197AC)

NO	CODE-NO	PART NAME	SPEC	QUANTITY	REMARK
1	DA63-02520A	COVER HINGE-UPP L	W2-PJT(05),ABS,-,-,-,-,-,SC-00477R,HG-0760H	1	
2	DA97-06705A	ASSY COVER HINGE-UPP R	NW2,ABS,-,-,-,-,-,Creamy STS(SC-07009R),-	1	RO045
2-1	DA63-04441A	COVER HINGE-UPP R	NW2-PJT,ABS,T2.0,-,-,-,-,Creamy STS(SC-07009R),-	1	RO045
2-2	DA34-00043C	SWITCH REED-ASS'Y	200VDC,1.5A,-	1	RO150
3	DA97-06716A	ASSY HINGE UPP-R	NW2,T3.0,-,-,-,-,-	1	RO042
3-1	DA61-04476A	HINGE-UPP R	NW2-PJT,SHP1,T3.0,-,-,-,-	1	RO128
3-2	DA63-02527A	SHIM HINGE-UPP	W2-PJT(05),HIPS,T1.0,-,-,-,-	1	RO067
4	DA97-06695A	ASSY HINGE-MID R	NW2,T4.5,-,-,-,-,-	1	
4-1	6009-001548	SCREW-SPECIAL	FH,HEX,-,M6,L20,ZPC3(WHT),SWRCH18(A),-,-	1	RQ747
4-2	DA61-04433B	HINGE-MID R	NW2,SHP1,T4.5,-,-,Ni-Cr Plated,-,DRAWER Type	1	RO123
4-3	DA63-03463A	SHIM-HINGE MID	AW-PJT,RD-PVC,T1.0,-,-,-,-	1	RO067
4-4	DA66-00611A	SHAFT HINGE-MID	NW2,SM45C,-,-,-,-,DRAWER	1	
5	DA97-00408E	ASSY COVER-COMP	W2-05,-,T0.35,-,-,-,-,-,-	1	
6	MK162DL1U/E09	COMPRESSOR	6.15CC,115/127V~60HZ,RSCR	1	RH002
7	DA63-02017A	GROMMET COMP	QUEEN,EPDM,-,-,-,-,-,BLACK,-	4	RH015
8	DA60-20008A	BOLT-HEX	S25C,M6,-,-,L42.6,WHITE,-,ZPC	4	RW074
9	DA63-01866A	COVER RELAY	NORYL,T2.0,-,-,-,SSEC,BLACK,HOOK	1	RH004
10	DA97-04049A	ASSY CAP-DRAIN	EPEL,ASSY,-,-,L224.5,-,SOFT-PVC	2	RZ110
11	DA62-01514A	DRYER	C1220T,OD18.70,L114,-,-,-	1	RH014
12	DA97-06698A	ASSY TRAY-DRAIN WATER	NW2,-,-,-,-,-	1	RH003
12-1	DA62-00954A	SEAL-SUB COND	W2-05,FOAM-PE,-,T7,-,-,-	1	RH030
12-2	DA63-04466A	TRAY DRAIN-WATER	NW2,PP,-,-,-,-,NTR,-	1	RH003
12-3	DA97-02791B	ASSY PIPE-SUB COND	NW2-PJT,-	1	RW005
12-4	DA97-03145L	ASSY SUPPORT-CIRCUIT MOTOR	AW2-PJT,-,-,-,-,1550RPM,2.7W	1	RO132
12-4-1	DA31-00146B	MOTOR BLDC	DRCP5030LA,1560,-,DC12V,230mA,-,-,2.7W,ATOP	1	RI089
12-4-2	DA61-02349B	SUPPORT-CIRCUIT MOTOR	NEXT,ABS,-,-,-,NTR,-	1	RF033
12-4-3	DA61-02355B	BRACKET-CIRCUIT MOTOR	ABS,NEXT,-,-,-,NTR,-	1	RH039
12-4-4	DA63-01146A	GROMMET-MOTOR,REAR	A-TOP,NBR,-,-,-,ID6.5,OD42,BLK,BLDC	1	RO138
12-4-5	DA63-40167A	GROMMET-COVER CHIL	SILICON,T3.0,-,L16,-,-,BLACK,-	1	RI087
12-4-6	DA96-00042A	ASSY-HARNESS MOTOR	A-TOP UL(MOTOR),C-FAN,350MM	1	RI133
12-5	DA31-00010D	FAN-ASS'Y	ET,ZIPEL,ASSY,-,UNIT,_150	1	RI085
13	DA97-06815A	ASSY CHASSIS COMP	NW2,T1.2,-,-,-,-	1	
13-1	DA60-90146A	PIN-CASTER	MSWR10,OD6.0,L40,ZPC2,SR-289-4	2	RH019
13-2	DA61-40126B	CASTER-REAR	REF-ALL,PP,-,PI 44,NTR,W22,-	2	RH011
13-3	DA64-02694A	CHASSIS COMP	NW2,SBHG1,T1.2,-,-,-,-	1	RO002
13-4	DA71-50240A	BRACKET-CABI	ALL,SBHG1,T1.6,-,-,-,-	1	
14	DA97-06673A	ASSY COVER LEG FRONT	NW2,-,-,-,-,-,-,CREAMY STS,-	1	RO003
14-1	DA63-04462A	COVER LEG-FRONT	NW2,PP,-,-,-,-,-,-,CREAMY STS,-	1	RO003
14-2	DA67-02071A	CAP LEG FRONT	NW2,PP,-,-,-,CREAMY STS,-	2	
15	DA97-06688A	ASSY SUPPORT-FOOT FRONT	NW2,-,-,-,-,-	2	
15-1	DA61-00805D	FOOT-FRONT	AW2-PJT,PP+MSWR10,-,BLACK,-,-,-	1	RO001
15-2	DA61-04490A	SUPPORT-FOOT FRONT	NW2,SHP1,T4.0,-,-,-,-	1	RO158
16	DA61-00176A	CASTER-FRONT	PP,-,OD40,NTR,-,-	2	RH009
17	DA60-90124A	RIVET	MSWR10,OD6.0,-,-,L56,-,-,-	2	RH012
18	DA97-06707A	ASSY VALVE WATER-HOSE	NW2,DISP,-,-,-	1	

EXPLODED VIEW & PARTS LIST

5-4) Disassembly of Freezer Door

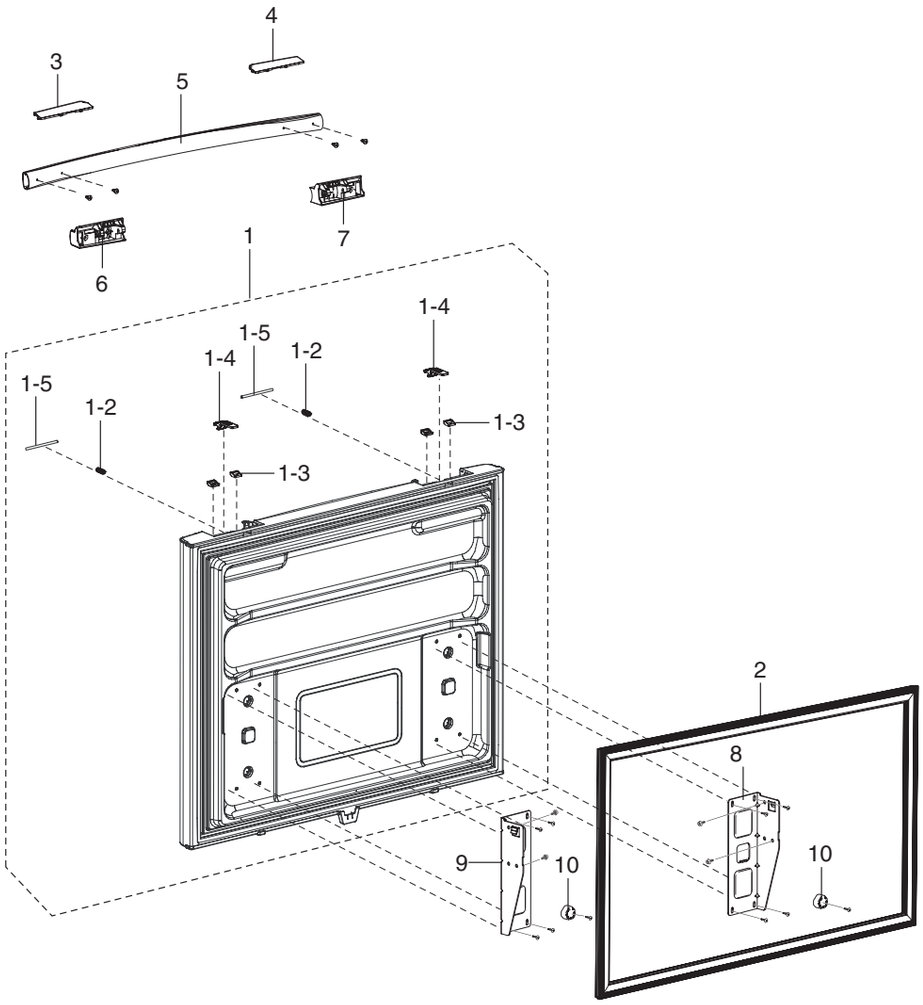

EXPLODED VIEW & PARTS LIST

■ Parts List of Freezer Door (RB217AC/RB197AC)

NO	CODE-NO	PART NAME	SPEC	QUANTITY	REMARK
1	DA91-02762A	ASSY DOOR FOAM FRE	NW2,VERSAILLES STS,-,-,EASY HANDLE,-	1	
	DA91-02762D	ASSY DOOR FOAM FRE	NW2,PLATINUM INOX,-,-,-,EASY HANDLE	1	
	DA91-02762B	ASSY DOOR FOAM FRE	NW2,I-BLACK,-,-,-,EASY HANDLE	1	
	DA91-02762E	ASSY DOOR FOAM FRE	NW2,SNOW WHITE,PCM,DRAWER	1	
1-2	DA61-04335B	SPRING ETC-EASY HANDLE	08 AW1,2-PJT,HSWR,1.0,8,10,-,9,-,-,-,-	2	
1-3	DA61-04471A	FIXER SHAFT-HANDLE	NW2,POM,-,NTR,-	4	
1-4	DA61-04474A	SLIDER-HANDLE FRE	NW2,POM,-,-,-,CREAMY-STS,-	2	
1-4	DA61-04474B	SLIDER-HANDLE FRE	NW2,POM,-,-,-,I-BLACK,-	2	
1-4	DA61-04474C	SLIDER-HANDLE FRE	NW2,POM,-,-,-,SNOW WHITE,-	2	
1-5	DA66-00609A	SHAFT-CAP HANDLE	NW2,MSWR10,L90,É≥5,-,-,-	2	
2	DA97-06694A	ASSY-GASKET DOOR FRE	NW2,SF-PVC,-,-	1	
2	DA97-06694B	ASSY-GASKET DOOR FRE	NW2,BLACK,-,-	1	
3	DA61-03153B	HANGER-RAIL FRONT L	AW-PJT,SECC1,T2.0,COOL-WHITE,-,-,RESTRIKING	1	
3	DA61-03155B	HANGER-RAIL FRONT R	AW-PJT,SECC1,T2.0,COOL-WHITE,-,-,RESTRIKING	1	
4	DA63-04451A	COVER HANDLE-FRE L	NW2,ABS,CREAMY STS	1	
4	DA63-04451B	COVER HANDLE-FRE L	NW2,ABS,I-BALCK	1	
4	DA63-04451C	COVER HANDLE-FRE L	NW2,ABS,SNOW WHITE	1	
5	DA63-04452A	COVER HANDLE-FRE R	NW2,ABS,CREAMY STS	1	
5	DA63-04452B	COVER HANDLE-FRE R	NW2,ABS,I-BLACK	1	
5	DA63-04452C	COVER HANDLE-FRE R	NW2,ABS,SNOW WHITE	1	
6	DA97-08870C	ASSY HANDLE-BAR FRE	NW2,AL,REAL-STAINLESS,HAIR LINE	1	
6	DA97-08870A	ASSY HANDLE BAR-FRE	NW2,MATURE BLACK,POWDER COATING	1	
6	DA97-08870B	ASSY HANDLE BAR-FRE	NW2,AL,SNOW WHITE(SC-97527T),POWDER COATING	1	
6-1	DA61-06264A	SUPPORT-HANDLE FRE	NW2,ABS,SNOW WHITE(SC-97527R)	2	
6-2	DA64-03340C	HANDLE BAR-FRE	NW2 FDR,AL,REAL-STAINLESS,A6063,HAIR LINE #4	2	
6-2	DA64-03340A	HANDLE BAR-FRE	NW2_FDR,AL,MATURE BLACK,A6063,POWDER COATING	2	
6-2	DA64-03340B	HANDLE BAR-FRE	NW2 FDR,AL,SNOW WHITE(SC-97527T),A6063,POWDER COATING	1	
6-3	DA67-02633A	CAP-HANDLE FRE	NW2_FDR,ABS,NTR,NI-CR Plating	2	
6-3	DA67-02633B	CAP-HANDLE FRE	NW2_FDR,ABS,I-BLACK(SC-00477R)	2	
6-3	DA67-02633C	CAP-HANDLE FRE	NW2_FDR,ABS,SNOW WHITE(SC-97527R)	2	
6-4	DA67-02636A	CAP-HANDLE BASE L	NW2,ABS+PC,CREAMY STS(SC-07009R),VERSAILLES SILVER(SC-05061S)	1	
6-4	DA67-02636C	CAP-HANDLE BASE L	NW2,ABS+PC,MATURE BLACK(SC-03108T)	1	
6-4	DA67-02636B	CAP-HANDLE BASE L	NW2,ABS+PC,SNOW WHITE(SC-97527T)	1	
6-5	DA67-02637A	CAP-HANDLE BASE R	NW2,ABS+PC,CREAMY STS(SC-07009R),VERSAILLES SILVER(SC-05061S)	1	
6-5	DA67-02637C	CAP-HANDLE BASE R	NW2,ABS+PC,MATURE BLACK(ST-03108T)	1	
6-5	DA67-02637B	CAP-HANDLE BASE R	NW2,ABS+PC,SNOW WHITE(SC-97527T)	1	

EXPLODED VIEW & PARTS LIST

5-5) Disassembly of Refrigerator Door

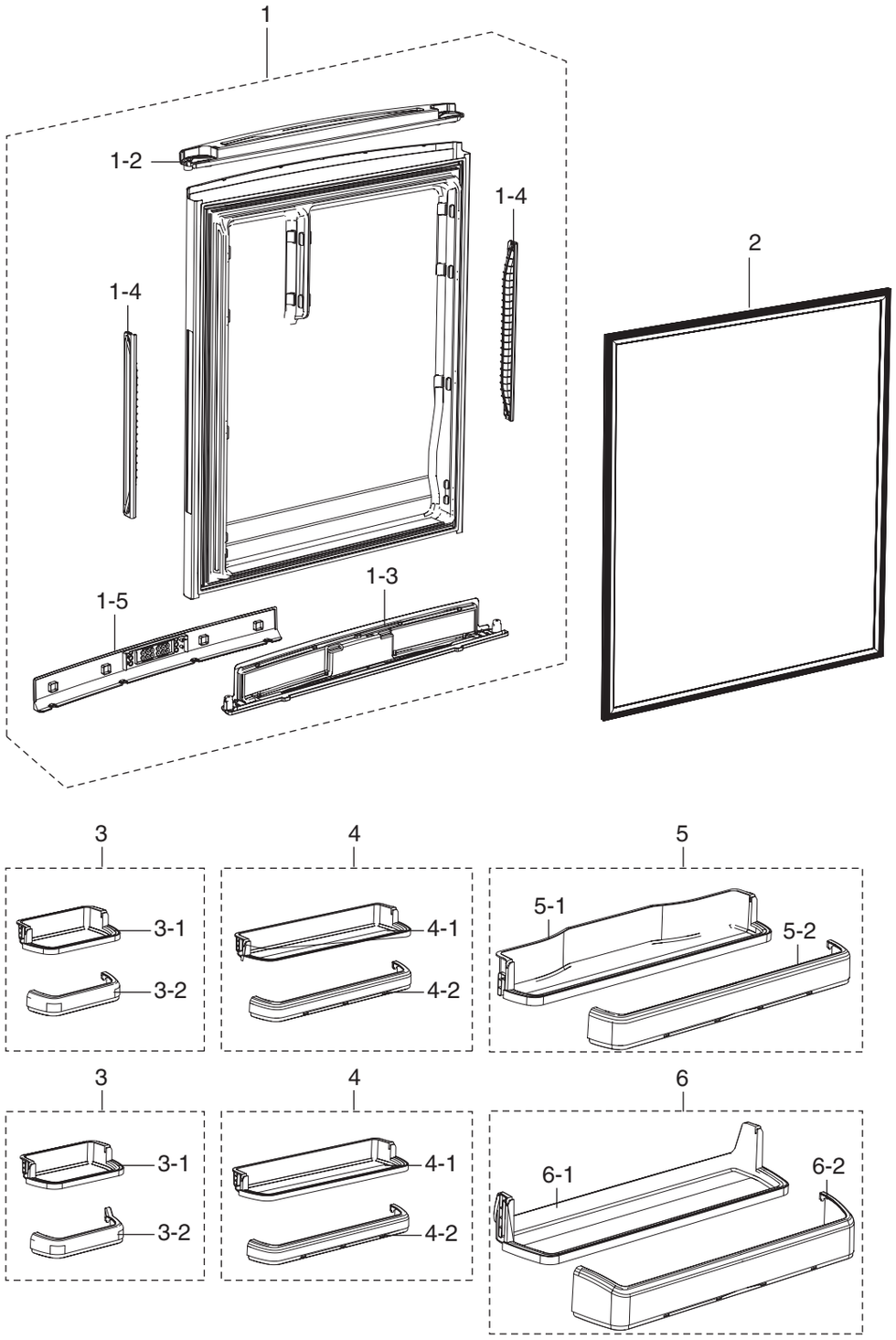

EXPLODED VIEW & PARTS LIST

■ Parts List of Refrigerator Door(RB217AC/RB197AC)

NO	CODE-NO	PART NAME	SPEC	QUANTITY	REMARK
1	DA91-02953D	ASSY DOOR-FOAM REF	NW2,Versailles STS (DAC-GR0803RS),RECESS HANDLE	1	RE001
1	DA91-02953F	ASSY DOOR-FOAM REF	NW2,PLATINUM INOX (DAC-GR0701TV),RECESS HANDLE	1	RE001
1	DA91-02953E	ASSY DOOR-FOAM REF	NW2,Empire Black (SC-04119TP),RECESS HANDLE	1	RE001
1	DA91-02953J	ASSY DOOR-FOAM REF	NW2,SNOW WHITE (SC-97527TP),PCM,RECESS HANDLE	1	RE001
1-1	DA64-02636A	PANEL DOOR-REF	NW2-PJT,ABS,-,-,-,-,COOL WHITE(SC-02740R),-	1	
1-2	DA97-06660A	ASSY CAP DOOR-REF UPP	NW2-PJT,-,-,-,-,Creamy STS(SC-07009R),-	1	
1-2	DA97-06660B	ASSY CAP DOOR-REF UPP	NW2,ABS,-,-,-,I-BLACK(SC-00477R),-	1	
1-2	DA97-06660C	ASSY CAP DOOR-REF UPP	NW2,ABS,-,-,-,SNOW WHITE(SC-97527R),-	1	
1-3	DA97-08871A	ASSY CAP DOOR-REF LOW	NW2-PJT,Creamy STS(SC-07009R)	1	
1-3	DA97-08871B	ASSY CAP-DOOR REF LOW	NW2-PJT,I-BLACK(SC-00477R),BASIC	1	
1-3	DA97-08871C	ASSY CAP-DOOR REF LOW	NW2-PJT,SNOW WHITE(SC-97527R),BASIC	1	
1-4	DA64-02633A	HANDLE REF-SIDE	NW2-PJT,ABS,-,-,-,-,Creamy STS(SC-07009R),-	2	
1-4	DA64-02633B	HANDLE REF-SIDE	NW2,ABS,-,-,-,-,I-BLACK(SC-00477R),-	2	
1-4	DA64-02633C	HANDLE REF-SIDE	NW2,ABS,-,-,-,-,SNOW WHITE(SC-97527R),-	2	
1-5	DA97-08872A	ASSY COVER CONTROL-FRONT	NW2-PJT,Creamy STS(SC-07009R)	1	RE014
1-5	DA97-08872B	ASSY COVER-CONTROL FRONT	NW2-PJT,I-BLACK(SC-00477R),BASIC,˚F & ICE OFF	1	RE014
1-5	DA97-08872C	ASSY COVER-CONTROL FRONT	NW2-PJT,SNOW WHITE(SC-97527R),BASIC,˚F & ICE OFF	1	RE014
2	DA97-06693A	ASSY-GASKET DOOR REF	NW2,SF-PVC,-,-	1	RE016
2	DA97-06693B	ASSY-GASKET DOOR REF	NW2,BLACK,-,-	1	RE016
3	DA97-06719B	ASSY GUARD-REF UPP R	NW2,HIPS+GPPS,-,-,-,-,-	2	
3-1	DA63-04468B	GUARD-REF UPP R	NW2,HIPS,-,-,-,NTR,-	1	
3-2	DA63-04472B	COVER-GUARD REF UPP R	NW2,GPPS,-,-,-,-,-,NTR,-	1	
4	DA97-06721B	ASSY GUARD-REF UPP L	NW2,HIPS+GPPS,-,-,-,-,-	2	
4-1	DA63-04469B	GUARD-REF UPP L	NW2,HIPS,-,-,-,COOL WHITE,-	1	
4-2	DA63-04473B	COVER-GUARD REF UPP L	NW2,GPPS,-,-,-,-,-,NTR,-	1	
5	DA97-06722B	ASSY GUARD-REF MID	NW2,HIPS+GPPS,-,-,-,-,-	1	RE025
5-1	DA63-04470B	GUARD-REF MID	NW2,HIPS,-,-,-,COOL WHITE,-	1	RE057
5-2	DA63-04474B	COVER-GUARD REF MID	NW2,GPPS,-,-,-,-,-,NTR,-	1	RE142
6	DA97-06724B	ASSY GUARD-REF LOW	NW2,HIPS+GPPS,-,-,-,-,-	1	RE025
6-1	DA63-04471B	GUARD-REF LOW	NW2,HIPS,-,-,-,COOL WHITE,-	1	RE025
6-2	DA63-04475B	COVER-GUARD REF LOW	NW2,GPPS,-,-,-,-,-,NTR,-	1	RE091

5 . EXPLODED VIEW & PARTS LIST

5-1) Freezer

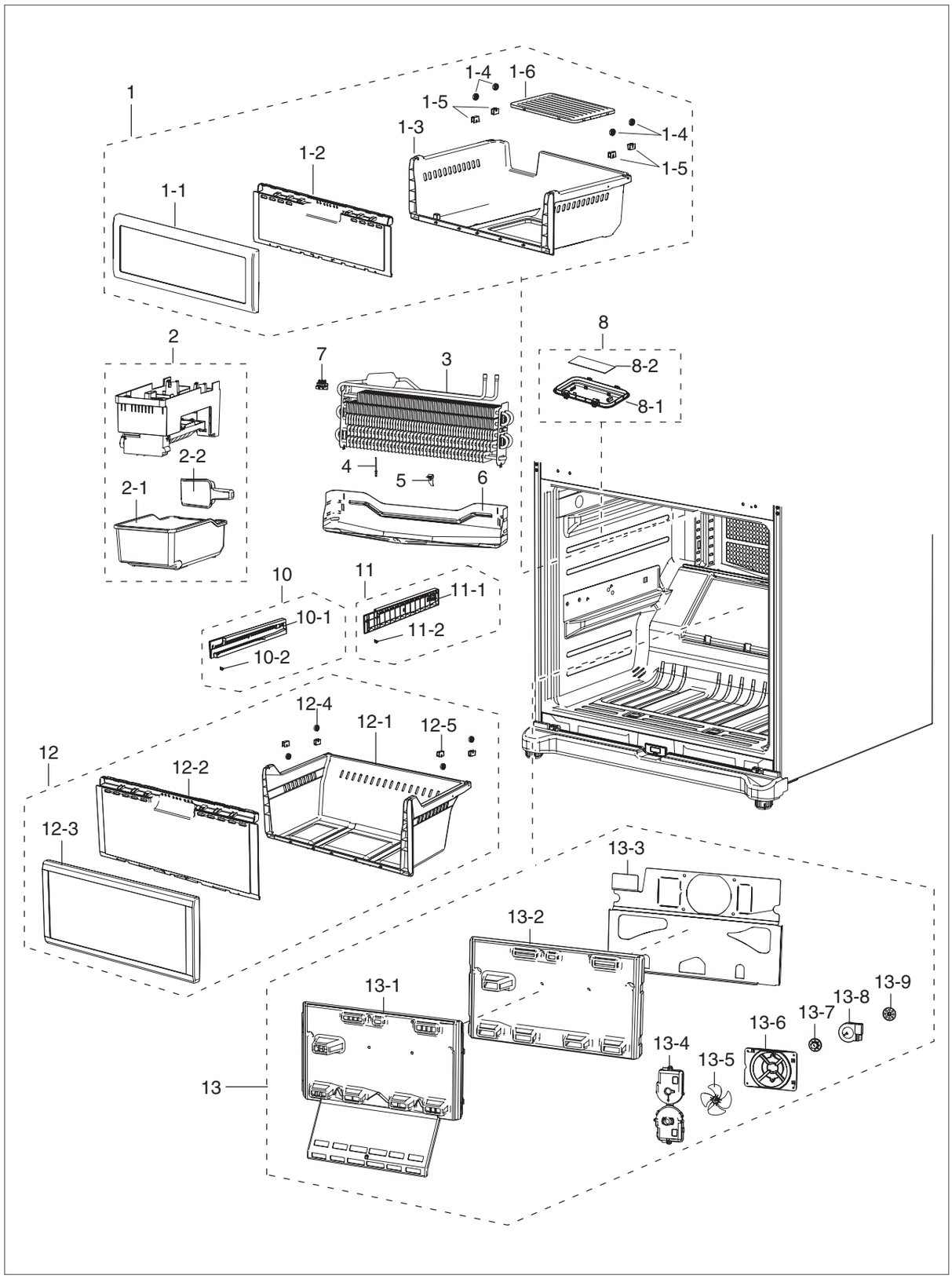

EXPLODED VIEW & PARTS LIST

■ Parts List of Freezer (RB215AC)

NO	CODE-NO	PART NAME	SPEC	QUANTITY	REMARK
1	DA97-08859A	ASSY TRAY-FRE UPP	NW2-FDR,21cu.ft	1	
1-1	DA63-04455A	COVER-TRAY FRE UPP A	NW2-PJT,HIPS,-,-,-,-,-,COOL WHT,-	1	
1-2	DA63-04456A	COVER-TRAY FRE UPP B	NW2-PJT,GPPS,-,-,-,-,-,-,-	1	
1-3	DA63-05607A	TRAY-FRE UPP	NW2-SEARS,HIPS,COOL WHITE(SC-2740R),21Cu.ft	1	
1-4	DA66-10104A	ROLLER-FRE	POM,-,-,D22,-,-,	4	
1-5	DA71-20145A	FIXER-ROLLER	-,PA,--,-	4	
1-6	DA61-02823A	WINDOW-TRAY FRE UPP	NW2,SAN,-,-,-,-,NTR,-	1	
2	DA90-04793A	ASSY ICE MAKER	NW2,AUTO ICE MAKER,-,-,-,-	1	RM001
2-1	DA61-03189A	CASE-ICE CUBE	AW-PJT,PP,-,-,-,COOL WHITE,-	1	RM012
2-2	DA67-01231A	SCOOP ICE	W2-PJT(05),PP(BJ-703T4),-,-,SC-02740R,-	1	RI247
3	DA96-00480A	ASSY EVAP-FRE	NW2-PJT,-,-,-,-,-,-,115V/240W,-	1	RF011
4	DA60-90005A	RIVET-AVEX	AL,D3.2,L9.83,-,-	1	
5	DA61-02901A	FIXER-SENSOR EVAP	CORE-PJT,PP,-,NTR,-	1	RI157
6	DA61-04462A	PLATE-DRAIN FRE	NW2-PJT,GALVANUME,T0.3,-,516,-,-	1	RF026
7	DA47-00243C	THERMO BIMETAL-PROTECTOR	AW-PJT(R),BT-121-M, PW-5M1N	1	RI074
8	DA97-08607A	ASSY COVER-LAMP FRE	NW2 FDR	1	
8-1	DA63-04955A	COVER-LAMP FRE	AW2 CD,PC,-,-,-,-,-,NTR,-	1	
8-2	DA96-00398K	ASSY-LAMP LED	NW2 FDR,3chip 4EA	1	
9					
10	DA97-06667A	ASSY RAIL-FRE LOW R	NW2-PJT,-,-,-,-,21INCH	1	
10-1	DA61-04482A	RAIL-FRE LOW R	NW2-PJT,ABS,-,-,-,COOL WHT,21INCH	1	RF171
10-2	DA63-40006A	GROMMET	RAIL,NY-6,-,-,-,-,-,-,RAIL	1	RW374
11	DA97-06668A	ASSY RAIL-FRE LOW L	NW2-PJT,-,-,-,-,21INCH	1	
11-1	DA61-04481A	RAIL-FRE LOW L	NW2-PJT,ABS,-,-,-,COOL WHT,21INCH	1	RF085
11-2	DA63-40006A	GROMMET	RAIL,NY-6,-,-,-,-,-,-,RAIL	1	RW374
12	DA97-06671A	ASSY TRAY-FRE LOW	NW2-PJT,-,-,-,-,21CU ft	1	RI057
12-1	DA63-04459A	TRAY-FRE LOW	NW2-PJT,HIPS,-,-,-,-,COOL WHT,21INCH	1	RI057
12-2	DA63-04460A	COVER-TRAY FRE LOW B	NW2-PJT,GPPS,-,-,-,-,-,-,-	1	
12-3	DA63-04461A	COVER-TRAY FRE LOW A	NW2-PJT,HIPS,-,-,-,-,-,COOL WHT,-	1	
12-4	DA66-10104A	ROLLER-FRE	POM,-,-,D22,-,-,	4	RW648
12-5	DA71-20145A	FIXER-ROLLER	-,PA,--,-	4	RH029
13	DA97-06657A	ASSY COVER-EVAP FRE	NW2-PJT,-,-,-,-,-,-,-,-	1	RF005
13-1	DA63-04444A	COVER-EVAP FRE	NW2-PJT,PP,-,-,-,-,-,COOL WHT,-	1	RF005
13-2	DA62-01942A	INSULATION-EVAP FRE	NW2-PJT,FOAM-PS,-,-,-,-,-,-,-	1	RI232
13-3	DA61-04461A	PLATE-INS EVAP FRE	NW2-PJT,GALVALUME,T0.3,-,-,-,-	1	RF092
13-4	DA63-01809A	COVER MOTOR-BLDC	BLDC-NEW,PP,NTR,-,-,-,-,-,BJ-730	1	RF083
13-5	DA31-00124A	FAN-AX100W4CC-T1	-,TD-PJT,ABS,-,-	1	RI085
13-6	DA61-03183A	CASE-MOTOR FRE	AW-PJT,BUBBLE PP,-,-,-,NTR,-	1	RF120
13-7	DA63-01808A	GROMMET-MOTOR,FRONT	BLDC,NBR,BLACK,-,-,-,-,-,H20	1	RO137
13-8	DA31-00146H	MOTOR BLDC	-,2950,-,DC12V,150mA,-,-,2.1W,-,-,-,-,-,-,-	1	RI089
13-9	DA63-01146A	GROMMET-MOTOR,REAR	A-TOP,NBR,-,-,-,ID6.5,OD42,BLK,BLDC	1	RO138

EXPLODED VIEW & PARTS LIST

■ Parts List of Freezer (RB195AC)

NO	CODE-NO	PART NAME	SPEC	QUANTITY	REMARK
1	DA97-08860A	ASSY TRAY-FRE UPP	NW2-PJT,-,-,-,-,19CU ft	1	
1-1	DA63-04455A	COVER-TRAY FRE UPP A	NW2-PJT,HIPS,-,-,-,-,-,COOL WHT,-	1	
1-2	DA63-04456A	COVER-TRAY FRE UPP B	NW2-PJT,GPPS,-,-,-,-,-,-,-,-	1	
1-3	DA63-05606A	TRAY FRE-UPP	NW2(19Cu.ft),HIPS,-,-,-,-,COOL WHITE,-	1	
1-4	DA66-10104A	ROLLER-FRE	POM,-,-,D22,-,-,	4	
1-5	DA71-20145A	FIXER-ROLLER	-,PA,--,-	4	
1-6	DA64-02823A	WINDOW-TRAY FRE UPP	NW2,SAN,-,-,-,-,NTR,-	1	
2	DA90-04793A	ASSY ICE MAKER	NW2,AUTO ICE MAKER,-,-,-,-	1	RM001
2-1	DA61-03189A	CASE-ICE CUBE	AW-PJT,PP,-,-,-,COOL WHITE,-	1	RM012
2-2	DA67-01231A	SCOOP ICE	W2-PJT(05),PP(BJ-703T4),-,-,SC-02740R,-	1	RI247
3	DA96-00480A	ASSY EVAP-FRE	NW2-PJT,-,-,-,-,-,-,115V/240W,-	1	RF011
4	DA60-90005A	RIVET-AVEX	AL,D3.2,L9.83,-,-	1	
5	DA61-02901A	FIXER-SENSOR EVAP	CORE-PJT,PP,-,NTR,-	1	RI157
6	DA61-04462A	PLATE-DRAIN FRE	NW2-PJT,GALVANUME,T0.3,-,516,-,-	1	RF026
7	DA47-00243C	THERMO BIMETAL-PROTECTOR	AW-PJT(R),BT-121-M, PW-5M1N	1	RI074
8	DA97-08607A	ASSY COVER-LAMP FRE	NW2 FDR	1	
8-1	DA63-04955A	COVER-LAMP FRE	AW2 CD,PC,-,-,-,-,-,NTR,-	1	
8-2	DA96-00398K	ASSY-LAMP LED	NW2 FDR,3chip 4EA	1	
9					
10	DA97-06666A	ASSY RAIL-FRE LOW R	NW2-PJT,-,-,-,-,19INCH	1	
10-1	DA61-04483A	RAIL-FRE LOW R	W2-PJT,ABS,-,-,-,COOL WHT,19INCH	1	RF171
10-2	DA63-40006A	GROMMET	RAIL,NY-6,-,-,-,-,-,-,RAIL	1	RW374
11	DA97-06665A	ASSY RAIL-FRE LOW L	NW2-PJT,-,-,-,-,19INCH	1	
11-1	DA61-04484A	RAIL-FRE LOW L	NW2-PJT,ABS,-,-,-,COOL WHT,19INCH	1	RF085
11-2	DA63-40006A	GROMMET	RAIL,NY-6,-,-,-,-,-,-,RAIL	1	RW374
12	DA97-06671A	ASSY TRAY-FRE LOW	NW2-PJT,-,-,-,-,19CU ft	1	
12-1	DA63-04458A	TRAY-FRE LOW	NW2-PJT,HIPS,-,-,-,-,COOL WHT,19INCH	1	RI057
12-2	DA63-04460A	COVER-TRAY FRE LOW B	NW2-PJT,GPPS,-,-,-,-,-,-,-	1	
12-3	DA63-04461A	COVER-TRAY FRE LOW A	NW2-PJT,HIPS,-,-,-,-,-,COOL WHT,-	1	
12-4	DA66-10104A	ROLLER-FRE	POM,-,-,D22,-,-,	4	RW648
12-5	DA71-20145A	FIXER-ROLLER	-,PA,--,-	4	RH029
13	DA97-06657A	ASSY COVER-EVAP FRE	NW2-PJT,-,-,-,-,-,-,-,-	1	RF005
13-1	DA63-04444A	COVER-EVAP FRE	NW2-PJT,PP,-,-,-,-,-,COOL WHT,-	1	RF005
13-2	DA62-01942A	INSULATION-EVAP FRE	NW2-PJT,FOAM-PS,-,-,-,-,-,-,-	1	RI232
13-3	DA61-04461A	PLATE-INS EVAP FRE	NW2-PJT,GALVALUME,T0.3,-,-,-,-	1	RF092
13-4	DA63-01809A	COVER MOTOR-BLDC	BLDC-NEW,PP,NTR,-,-,-,-,-,BJ-730	1	RF083
13-5	DA31-00124A	FAN-AX100W4CC-T1	-,TD-PJT,ABS,-,-	1	RI085
13-6	DA61-03183A	CASE-MOTOR FRE	AW-PJT,BUBBLE PP,-,-,-,NTR,-	1	RF120
13-7	DA63-01808A	GROMMET-MOTOR,FRONT	BLDC,NBR,BLACK,-,-,-,-,-,H20	1	RO137
13-8	DA31-00146H	MOTOR BLDC	-,2950,-,DC12V,150mA,-,-,2.1W,-,-,-,-,-,-,-	1	RI089
13-9	DA63-01146A	GROMMET-MOTOR,REAR	A-TOP,NBR,-,-,-,ID6.5,OD42,BLK,BLDC	1	RO138

EXPLODED VIEW & PARTS LIST

5-2) Refrigerator

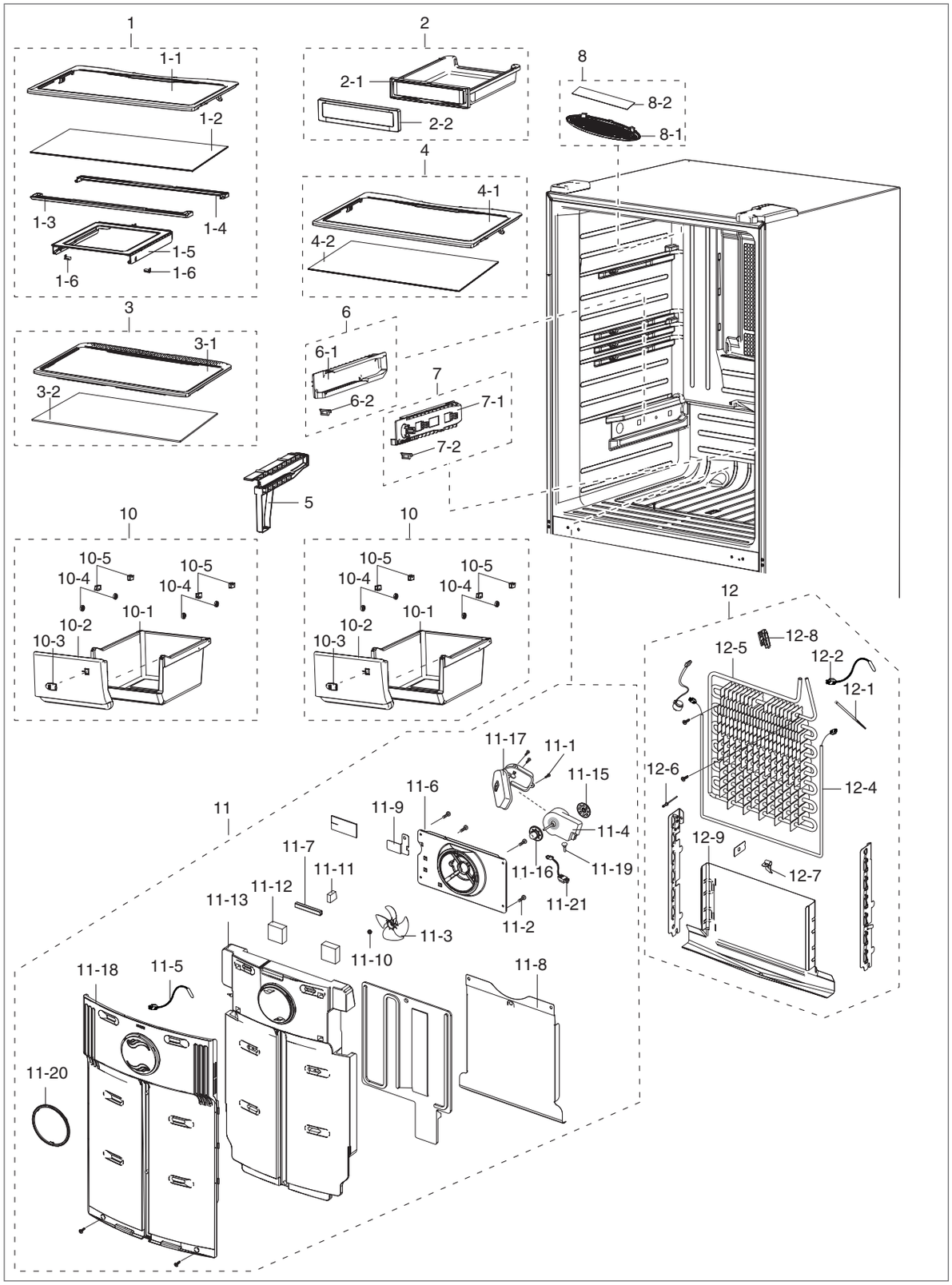

EXPLODED VIEW & PARTS LIST

■ Parts List of Refrigerator (RB215AC)

NO	CODE-NO	PART NAME	SPEC	QUANTITY	REMARK
1	DA97-06686A	ASSY SHELF-REF UPP	NW2,19cu.ft	1	RI041
1-1	DA64-02645A	TRIM SHELF-REF	NW2,HIPS,-,-,-,COOL WHITE,21cu.ft	1	RI079
1-2	DA64-02647A	GLASS-SHELF	NW2,GLASS,T4.0,-,-,-,-,-	1	RI037
1-3	DA61-04511A	SUPPORT-GUIDE RAIL FRONT	NW2,HIPS,-,-,-,COOL WHITE,-	1	
1-4	DA61-04510A	SUPPORT-GUIDE RAIL REAR	NW2,HIPS,-,-,-,COOL WHITE,-	1	
1-5	DA61-04505A	GUIDE-RAIL	NW2,HIPS,-,-,-,COOL WHITE,-	1	
1-6	DA63-00202A	GROMMET-RAIL	-,NY-6,-,-,-,-,-,-,-	2	RI088
2	DA97-06674A	ASSY TRAY-CHILLED ROOM	NW2,-,-,-,-,19cu.ft	1	RI018
2-1	DA63-04464A	TRAY CHIL ROOM	NW2,GPPS,-,-,-,-,-,-	1	RI018
2-2	DA63-04465A	COVER-TRAY CHIL ROOM	NW2,HIPS,-,-,-,-,-,COOL WHITE,-	1	
3	DA97-06675A	ASSY SHELF-TRIM REF MID	NW2,-	1	
3-1	DA64-02645A	TRIM SHELF-REF	NW2,HIPS,-,-,-,COOL WHITE,21cu.ft	1	RI079
3-2	DA64-02647A	GLASS-SHELF	NW2,GLASS,T4.0,-,-,-,-,-	1	RI037
4	DA97-00663H	ASSY COVER-VEG	W2-PJT(55), ABS+SHELF,GLASS(T5.0),cool white	1	RI997
4-1	DA64-00448B	TRIM-COVER VEG	W2-PJT(55),ABS,-,T2.5,L403,W717,cool white	1	RI091
4-2	DA67-01807H	SHELF-GLASS	W2-PJT(55), GLASS,T5,W708.5,L346,-,COVER-VEG	1	RF183
5	DA61-00760B	RAIL-VEG, MID	W2-PJT(55),ABS,T2.5,-,-,COOL-WHITE,SC-02740R	1	RI030
6	DA97-00103N	ASSY RAIL-VEG, L	W2-PJT,ABS,L341.5,SC-02740R,cool white,-	1	RI028
6-1	DA61-60126E	RAIL-VEG	W2-PJT,ABS,T3.0,-,LEFT,COOL-WHITE,SC-02740R	1	RI028
6-2	DA63-40006A	GROMMET	RAIL,NY-6,-,-,-,-,-,-,RAIL	1	RW374
7	DA97-00103P	ASSY RAIL-VEG, R	W2-PJT,ABS,L341.5,SC-02740R,cool white,-	1	RI029
7-1	DA61-60127E	RAIL-VEG	W2-PJT,ABS,T3.0,-,RIGHT,COOL-WHITE,SC-02740R	1	RI028
7-2	DA63-40006A	GROMMET	RAIL,NY-6,-,-,-,-,-,-,RAIL	1	RW374
8	DA97-08606A	ASSY COVER-LAMP REF	RAIL,NY-6,-,-,-,-,-,-,RAIL	1	
8-1	DA63-05430A	COVER LAMP-REF	W2-PJT,ABS,L341.5,SC-02740R,cool white,-	1	
8-2	DA96-00398F	ASSY-LAMP LED	W2-PJT,ABS,T3.0,-,RIGHT,COOL-WHITE,SC-	1	
10	DA97-06700A	ASSY CASE-VEG REF	NW2-PJT,-,-,-,-,-	2	RI999
10-1	DA61-00762A	CASE-VEG,REF	W2-PJT(55),HIPS,-,-,-,WHITE,HG-1760	1	RI999
10-2	DA63-04445A	COVER-VEG REF	NW2-PJT,SAN,-,-,-,-,-,NATURAL,-	1	RI010
10-3	DA64-00656A	KNOB-HUMIDITY	W2-PJT,ABS,-,-,-,-,W9540,-,BEST BYE	1	RW508
10-4	DA66-10104A	ROLLER-FRE	POM,-,-,D22,-,-,	4	RW648
10-5	DA71-20145A	FIXER-ROLLER	-,PA,--,-	4	RH029
11	DA96-00365E	ASSY EVAP-REF	AW-PJT(265,266),-,-,-,115V/120W,-,-,-,-	1	
11-1	6002-000213	SCREW-TAPPING	TH,+,-,1,M4,L12,ZPC(WHT),SWRCH18A,-	3	RS047
11-2	6002-000215	SCREW-TAPPING	TH,+,-,1,M4.0,L16,ZPC(WHT),SWRCH18A,-	4	RS080
11-3	DA31-00124A	FAN-AX100W4CC-T1	-,TD-PJT,ABS,-,-	1	RI085
11-4	DA31-00146H	MOTOR BLDC	2950,-,DC12V,150mA,-,-,2.1W,-,-,-,-,-,-,-	1	RI089
11-5	DA32-10105X	SENSOR TEMP	PX-41C,QUEEN PJT,-10,5V,-,-,F-SENSOR,YELLOW	1	RQ684
11-6	DA61-03181A	CASE-MOTOR REF	AW-PJT,BUBBLE PP,-,-,-,NTR,-	1	RF121
11-7	DA61-03182A	GUIDE-INS EVAP REF	AW-PJT,ABS,-,-,-,NTR,-	1	RI210
11-8	DA61-03186A	PLATE-INS EVAP REF	AW-PJT,GALVANUME,T0.4,-,-,-,-	1	
11-9	DA61-03599A	PLATE-HOUSING REF	AW-PJT,GALVALUME,T0.3,-,-,-,-	1	RI307
11-10	DA61-20128A	SPRING ETC-FAN	-,STS304,PI7.8,-,OD1.0,-,-,-,-,-,FD	1	RW716
11-11	DA62-01383A	INSULATION-EVAP SUB	AW-PJT,FOAM-PS,-,-,-,-,-,-,-	1	RI232
11-12	DA62-01423A	INSULATION-EVAP DUCT	AW-PJT,FOAM-PS,T20,W44.5,L45,-,-,-,-	2	RI236
11-13	DA62-01941A	INSULATION-EVAP REF	NW2-PJT,FOAM-PS,-,-,-,-,-,-,-	1	RI231
11-14	DA62-01969A	INSULATION-EVAP REAR	NW2-PJT,FOAM-PS,-,-,-,-,-,-,-	1	RI233
11-15	DA63-01146A	GROMMET-MOTOR,REAR	A-TOP,NBR,-,-,-,ID6.5,OD42,BLK,BLDC	1	RO138
11-16	DA63-01808A	GROMMET-MOTOR,FRONT	BLDC,NBR,BLACK,-,-,-,-,-,H20	1	RO137
11-17	DA63-01809A	COVER MOTOR-BLDC	BLDC-NEW,PP,NTR,-,-,-,-,-,BJ-730	1	RF083
11-18	DA63-04439A	COVER-EVAP REF	NW2-PJT,PP,-,-,-,-,-,COOL WHT,-	1	RI024
11-19	DA63-40167A	GROMMET-COVER CHIL	T3.0,SILICON,-,-,-,-,-,-,NTR	1	RI087

EXPLODED VIEW & PARTS LIST

■ Parts List of Refrigerator (RB215AC)

NO	CODE-NO	PART NAME	SPEC	QUANTITY	REMARK
11-20	DA64-02065A	TRIM-COVER EVAP REF	AW-PJT,ABS,-,-,-,COOL WHITE,-	1	RI241
11-21	DA96-00042J	ASSY-HARNESS MOTOR	AW-PJT,R-Fan/ F-Fan	1	
12	DA96-00365E	ASSY EVAP-REF	AW-PJT(265,266),-,-,-,115V/120W,-,-,-,-	4	
12-1	6501-000123	CABLE TIE	DACT-140,-,W3.6,L146,NTR,NYLON66	1	RO101
12-2	DA32-00027B	SENSOR TEMP	502AT,AW-PJT,-40~110°,5V,-,-,R-DEF-SENSOR	1	
12-3	DA47-00243S	THERMO BIMETAL-PROTECTOR	AW-PJT(R),BT-121-M, PW-5M1N,125 / 250V,10	1	
12-4	DA47-00244D	HEATER-METAL SHEATH	AW-PJT,-,120W,-,115V,110.2βY,R-ROOM	1	
12-5	DA59-00357B	EVAP REF	-,-,-,-,-,-,-,-,AW-PJT,-	1	RI016
12-6	DA60-90005A	RIVET-AVEX	AL,D3.2,L9.83,-,-	1	
12-7	DA61-03644A	PLATE-EVAP HEATER	AW-PJT,AL,T0.7,-,-,-,-	1	RF170
12-8	DA61-03683A	FIXER-SENSER	AW-PJT,ABS,-,NTR,-	1	RM017
12-9	DA61-04148A	PLATE-DRAIN REF	AW-PJT('08),GALVANUME,T0.3,-,-,-,-		RF026

EXPLODED VIEW & PARTS LIST

■ Parts List of Refrigerator (RB195AC)

NO	CODE-NO	PART NAME	SPEC	QUANTITY	REMARK
1	DA97-06685A	ASSY SHELF-REF UPP	NW2,19cu.ft	1	RI041
1-1	DA64-02644A	TRIM SHELF-REF	NW2,HIPS,-,-,-,COOL WHITE,19cu.ft	1	RI079
1-2	DA64-02646A	GLASS-SHELF	NW2,GLASS,-,-,-,-,-,19cu.ft	1	RI037
1-3	DA61-04511A	SUPPORT-GUIDE RAIL FRONT	NW2,HIPS,-,-,-,COOL WHITE,-	1	
1-4	DA61-04510A	SUPPORT-GUIDE RAIL REAR	NW2,HIPS,-,-,-,COOL WHITE,-	1	
1-5	DA61-04503A	GUIDE-RAIL	NW2,HIPS,-,-,-,COOLWHITE,19cu.ft	1	
1-6	DA63-00202A	GROMMET-RAIL	-,NY-6,-,-,-,-,-,-,-	2	RI088
2	DA97-06677A	ASSY TRAY-CHILLED ROOM	NW2,-,-,-,-,19cu.ft	1	RI018
2-1	DA63-04463A	TRAY CHIL ROOM	NW2,GPPS,-,-,-,-,-,19cu.ft	1	RI018
2-2	DA63-04465A	COVER-TRAY CHIL ROOM	NW2,HIPS,-,-,-,-,-,COOL WHITE,-	1	
3	DA97-06687A	ASSY SHELF-TRIM REF MID	NW2,19cu.ft	1	RI040
3-1	DA64-02644A	TRIM SHELF-REF	NW2,HIPS,-,-,-,COOL WHITE,19cu.ft	1	RI079
3-2	DA64-02646A	GLASS-SHELF	NW2,GLASS,-,-,-,-,-,19cu.ft	1	RI037
4	DA97-00663G	ASSY COVER-VEG	W2-PJT, ABS+SHELF,GLASS(T5.0), SC-02740R, cool white	1	RI997
4-1	DA64-00449B	TRIM-COVER VEG	W2-PJT,ABS,-,T2.5,SC-02740R,cool white,-	1	RI091
4-2	DA67-01807G	SHELF-GLASS	W2-PJT(50), GLASS, T5, W708.5, L296,-, COVER-VEG(50)	1	RF183
5	DA61-00761B	RAIL-VEG, MID	W2-PJT,ABS,T2.5,-,-,COOL-WHITE,SC-02740R	1	RI030
6	DA97-00103N	ASSY RAIL-VEG, L	W2-PJT,ABS,L341.5,SC-02740R,cool white,-	1	RI028
6-1	DA61-60126E	RAIL-VEG	W2-PJT,ABS,T3.0,-,LEFT,COOL-WHITE,SC-02740R	1	RI028
6-2	DA63-40006A	GROMMET	RAIL,NY-6,-,-,-,-,-,-,RAIL	1	RW374
7	DA97-00103P	ASSY RAIL-VEG, R	W2-PJT,ABS,L341.5,SC-02740R,cool white,-	1	RI029
7-1	DA61-60127E	RAIL-VEG	W2-PJT,ABS,T3.0,-,RIGHT,COOL-WHITE,SC-02740R	1	RI028
7-2	DA63-40006A	GROMMET	RAIL,NY-6,-,-,-,-,-,-,RAIL	1	RW374
8	DA97-08606A	ASSY COVER-LAMP REF	RAIL,NY-6,-,-,-,-,-,-,RAIL	1	
8-1	DA63-05430A	COVER LAMP-REF	W2-PJT,ABS,L341.5,SC-02740R,cool white,-	1	
8-2	DA96-00398F	ASSY-LAMP LED	W2-PJT,ABS,T3.0,-,RIGHT,COOL-WHITE,SC-	1	
10	DA97-06725A	ASSY CASE-VEG REF	NW2,-,-,-,19cu.ft,-	2	RI998
10-1	DA61-00759B	CASE-VEG,REF	W2-PJT,HIPS,-,SC-02740R,-,COOL-WHITE,-	1	RI998
10-2	DA63-04445A	COVER-VEG REF	NW2-PJT,SAN,-,-,-,-,-,NATURAL,-	1	RI010
10-3	DA64-00656A	KNOB-HUMIDITY	W2-PJT,ABS,-,-,-,-,W9540,-,BEST BYE	1	RW508
10-4	DA66-10104A	ROLLER-FRE	POM,-,-,D22,-,-,	4	RW648
10-5	DA71-20145A	FIXER-ROLLER	-,PA,--,-	4	RH029
11	DA96-00365E	ASSY EVAP-REF	AW-PJT(265,266),-,-,-,115V/120W,-,-,-,-	1	
11-1	6002-000213	SCREW-TAPPING	TH,+,-,1,M4,L12,ZPC(WHT),SWRCH18A,-	3	RS047
11-2	6002-000215	SCREW-TAPPING	TH,+,-,1,M4.0,L16,ZPC(WHT),SWRCH18A,-	4	RS080
11-3	DA31-00124A	FAN-AX100W4CC-T1	-,TD-PJT,ABS,-,-	1	RI085
11-4	DA31-00146H	MOTOR BLDC	2950,-,DC12V,150mA,-,-,2.1W,-,-,-,-,-,-,-	1	RI089
11-5	DA32-10105X	SENSOR TEMP	PX-41C,QUEEN PJT,-10,5V,-,-,F-SENSOR,YELLOW	1	RQ684
11-6	DA61-03181A	CASE-MOTOR REF	AW-PJT,BUBBLE PP,-,-,-,NTR,-	1	RF121
11-7	DA61-03182A	GUIDE-INS EVAP REF	AW-PJT,ABS,-,-,-,NTR,-	1	RI210
11-8	DA61-03186A	PLATE-INS EVAP REF	AW-PJT,GALVANUME,T0.4,-,-,-,-	1	
11-9	DA61-03599A	PLATE-HOUSING REF	AW-PJT,GALVALUME,T0.3,-,-,-,-	1	RI307
11-10	DA61-20128A	SPRING ETC-FAN	-,STS304,PI7.8,-,OD1.0,-,-,-,-,-,FD	1	RW716
11-11	DA62-01383A	INSULATION-EVAP SUB	AW-PJT,FOAM-PS,-,-,-,-,-,-,-	1	RI232
11-12	DA62-01423A	INSULATION-EVAP DUCT	AW-PJT,FOAM-PS,T20,W44.5,L45,-,-,-,-	2	RI236
11-13	DA62-01941A	INSULATION-EVAP REF	NW2-PJT,FOAM-PS,-,-,-,-,-,-,-	1	RI231
11-14	DA62-01969A	INSULATION-EVAP REAR	NW2-PJT,FOAM-PS,-,-,-,-,-,-,-	1	RI233
11-15	DA63-01146A	GROMMET-MOTOR,REAR	A-TOP,NBR,-,-,-,ID6.5,OD42,BLK,BLDC	1	RO138
11-16	DA63-01808A	GROMMET-MOTOR,FRONT	BLDC,NBR,BLACK,-,-,-,-,-,H20	1	RO137
11-17	DA63-01809A	COVER MOTOR-BLDC	BLDC-NEW,PP,NTR,-,-,-,-,-,BJ-730	1	RF083
11-18	DA63-04439A	COVER-EVAP REF	NW2-PJT,PP,-,-,-,-,-,COOL WHT,-	1	RI024
11-19	DA63-40167A	GROMMET-COVER CHIL	T3.0,SILICON,-,-,-,-,-,-,NTR	1	RI087

EXPLODED VIEW & PARTS LIST

■ Parts List of Refrigerator (RB195AC)

NO	CODE-NO	PART NAME	SPEC	QUANTITY	REMARK
11-20	DA64-02065A	TRIM-COVER EVAP REF	AW-PJT,ABS,-,-,-,COOL WHITE,-	1	RI241
11-21	DA96-00042J	ASSY-HARNESS MOTOR	AW-PJT,R-Fan/ F-Fan	1	
12	DA96-00365E	ASSY EVAP-REF	AW-PJT(265,266),-,-,-,115V/120W,-,-,-,-	4	
12-1	6501-000123	CABLE TIE	DACT-140,-,W3.6,L146,NTR,NYLON66	1	RO101
12-2	DA32-00027B	SENSOR TEMP	502AT,AW-PJT,-40~110°,5V,-,-,R-DEF-SENSOR	1	
12-3	DA47-00243S	THERMO BIMETAL-PROTECTOR	AW-PJT(R),BT-121-M, PW-5M1N,125 / 250V,10	1	
12-4	DA47-00244D	HEATER-METAL SHEATH	AW-PJT,-,120W,-,115V,110.2βY,R-ROOM	1	
12-5	DA59-00357B	EVAP REF	-,-,-,-,-,-,-,-,AW-PJT,-	1	RI016
12-6	DA60-90005A	RIVET-AVEX	AL,D3.2,L9.83,-,-	1	
12-7	DA61-03644A	PLATE-EVAP HEATER	AW-PJT,AL,T0.7,-,-,-,-	1	RF170
12-8	DA61-03683A	FIXER-SENSER	AW-PJT,ABS,-,NTR,-	1	RM017
12-9	DA61-04148A	PLATE-DRAIN REF	AW-PJT('08),GALVANUME,T0.3,-,-,-,-		RF026

EXPLODED VIEW & PARTS LIST

5-3) Cabinet

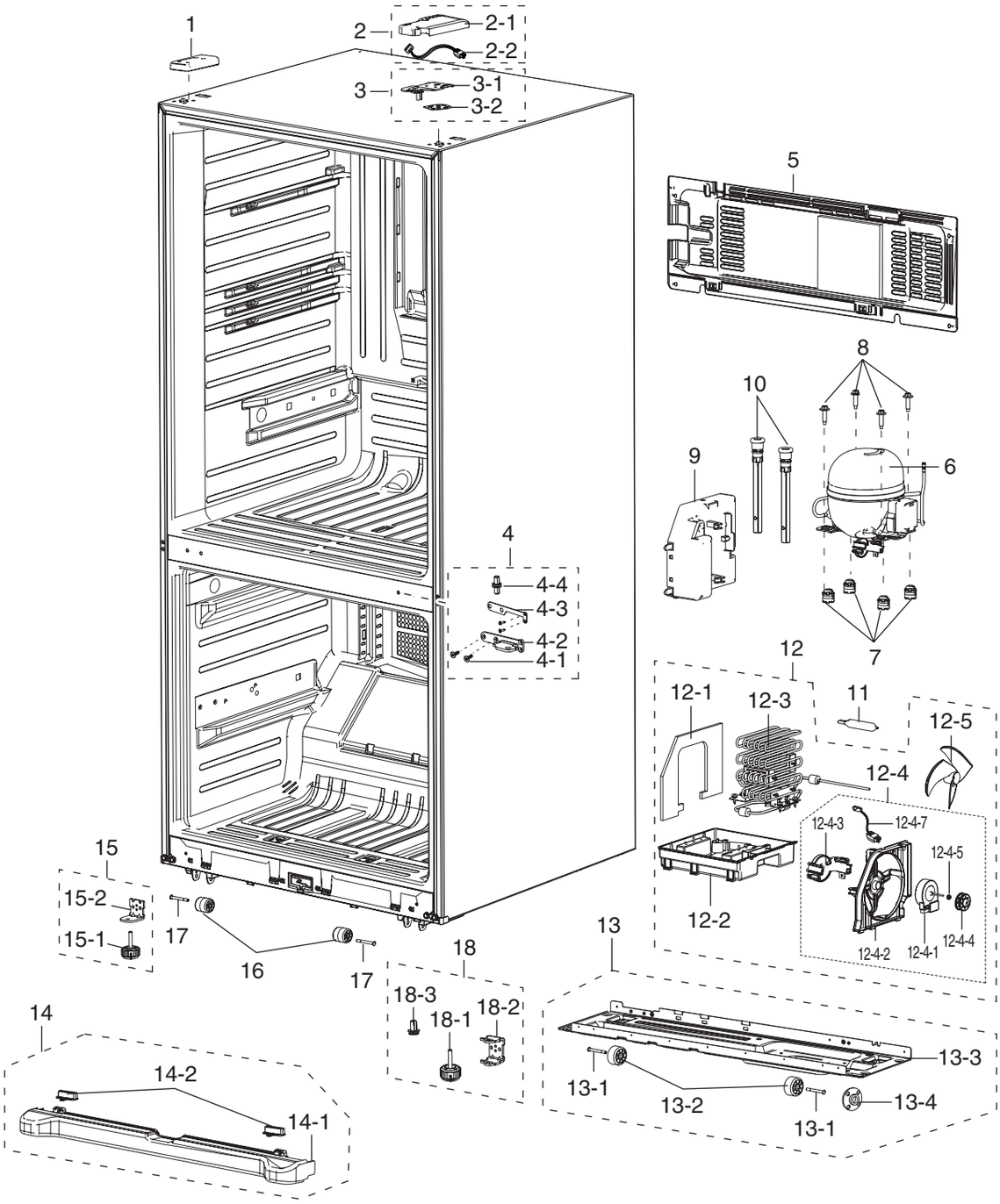

EXPLODED VIEW & PARTS LIST

■ Parts List of Cabinet (RB215AC)

NO	CODE-NO	PART NAME	SPEC	QUANTITY	REMARK
1	DA63-02520A	COVER HINGE-UPP L	W2-PJT(05),ABS,-,-,-,-,-,SC-00477R,HG-0760H	1	
2	DA97-06705A	ASSY COVER HINGE-UPP R	NW2,ABS,-,-,-,-,-,Creamy STS(SC-07009R),-	1	RO045
2-1	DA63-04441A	COVER HINGE-UPP R	NW2-PJT,ABS,T2.0,-,-,-,-,Creamy STS(SC-07009R),-	1	RO045
2-2	DA34-00043C	SWITCH REED-ASS'Y	200VDC,1.5A,-	1	RO150
3	DA97-06716A	ASSY HINGE UPP-R	NW2,T3.0,-,-,-,-,-	1	RO042
3-1	DA61-04476A	HINGE-UPP R	NW2-PJT,SHP1,T3.0,-,-,-,-,-	1	RO128
3-2	DA63-02527A	SHIM HINGE-UPP	W2-PJT(05),HIPS,T1.0,-,-,-,-	1	RO067
4	DA97-06701A	ASSY HINGE-MID	NW2,-,-,-,-,-,-	1	RO039
4-1	6009-001548	SCREW-SPECIAL	FH,HEX,-,M6,L20,ZPC3(WHT),SWRCH18(A),-,-	2	RQ747
4-2	DA61-04433C	HINGE-MID R	NW2,SHP1,T4.5,-,-,Ni-Cr Plated,-,SWING Type	1	RO123
4-3	DA61-04433C	SHIM-HINGE MID	AW-PJT,RD-PVC,T1.0,-,-,-,-	1	RO123
4-4	DA66-00610A	SHAFT-HINGE	NW2,MSWR10,-,-,-,-,-	1	RC012
5	DA97-00408E	ASSY COVER-COMP	W2-05,-,T0.35,-,-,-,-,-	1	
6	MK162DL1U/E09	COMPRESSOR	6.15CC,115/127V~60HZ,RSCR	1	RH002
7	DA63-02017A	GROMMET COMP	QUEEN,EPDM,-,-,-,-,-,BLACK,-	4	RH015
8	DA60-20008A	BOLT-HEX	S25C,M6,-,-,L42.6,WHITE,-,ZPC	4	RW074
9	DA63-01866A	COVER RELAY	NORYL,T2.0,-,-,-,SSEC,BLACK,HOOK	1	RH004
10	DA97-04049A	ASSY CAP-DRAIN	EPEL,ASSY,-,-,L224.5,-,SOFT-PVC	2	RZ110
11	DA62-01514A	DRYER	C1220T,OD18.70,L114,-,-,-	1	RH014
12	DA97-06698A	ASSY TRAY-DRAIN WATER	NW2,-,-,-,-,-	1	RH003
12-1	DA62-00954A	SEAL-SUB COND	W2-05,FOAM-PE,-,T7,-,-,-	1	RH030
12-2	DA63-04466A	TRAY DRAIN-WATER	NW2,PP,-,-,-,-,NTR,-	1	RH003
12-3	DA97-02791B	ASSY PIPE-SUB COND	NW2-PJT,-	1	RW005
12-4	DA97-03145L	ASSY SUPPORT-CIRCUIT MOTOR	AW2-PJT,-,-,-,-,1550RPM,2.7W	1	RO132
12-4-1	DA31-00146B	MOTOR BLDC	DRCP5030LA,1560,-,DC12V,230mA,-,-,2.7W,ATOP	1	RI089
12-4-2	DA61-02349B	SUPPORT-CIRCUIT MOTOR	NEXT,ABS,-,-,-,NTR,-	1	RF033
12-4-3	DA61-02355B	BRACKET-CIRCUIT MOTOR	ABS,NEXT,-,-,-,NTR,-	1	RH039
12-4-4	DA63-01146A	GROMMET-MOTOR,REAR	A-TOP,NBR,-,-,-,ID6.5,OD42,BLK,BLDC	1	RO138
12-4-5	DA63-40167A	GROMMET-COVER CHIL	SILICON,T3.0,-,L16,-,-,BLACK,-	1	RI087
12-4-6	DA96-00042A	ASSY-HARNESS MOTOR	A-TOP UL(MOTOR),C-FAN,350MM	1	RI133
12-5	DA31-00010D	FAN-ASS'Y	ET,ZIPEL,ASSY,-,UNIT,_150	1	RI085
13	DA97-06815A	ASSY CHASSIS COMP	NW2,T1.2,-,-,-,-	1	
13-1	DA60-90146A	PIN-CASTER	MSWR10,OD6.0,L40,ZPC2,SR-289-4	2	RH019
13-2	DA61-40126B	CASTER-REAR	REF-ALL,PP,-,PI 44,NTR,W22,-	2	RH011
13-3	DA64-02694A	CHASSIS COMP	NW2,SBHG1,T1.2,-,-,-,-	1	RO002
13-4	DA71-50240A	BRACKET-CABI	ALL,SBHG1,T1.6,-,-,-,-	1	
14	DA97-06673A	ASSY COVER LEG FRONT	NW2,-,-,-,-,-,-,CREAMY STS,-	1	
14-1	DA63-04462A	COVER LEG-FRONT	NW2,PP,-,-,-,-,-,CREAMY STS,-	1	RO003
14-2	DA67-02071A	CAP LEG FRONT	NW2,PP,-,-,-,CREAMY STS,-	2	
15	DA97-06688A	ASSY SUPPORT-FOOT FRONT	NW2,-,-,-,-,-	1	
15-1	DA61-00805D	FOOT-FRONT	AW2-PJT,PP+MSWR10,-,BLACK,-,-,-	1	RO001
15-2	DA61-04490A	SUPPORT-FOOT FRONT	NW2,SHP1,T4.0,-,-,-,-	1	RO158
16	DA61-00176A	CASTER-FRONT	PP,-,OD40,NTR,-,-	2	RH009
17	DA60-90124A	RIVET	MSWR10,OD6.0,-,-,L56,-,-,-	2	RH012
18	DA97-06706A	ASSY HINGE LOW	NW2,-,-,-,-,-,-	1	RO036
18-1	DA61-00805D	FOOT-FRONT	AW2-PJT,PP+MSWR10,-,BLACK,-,-,-	1	RO001
18-2	DA61-04488A	HINGE-LOW	NW2,SHP1,T4.0,-,-,-,-,-	1	RO036
18-3	DA66-00611A	SHAFT HINGE-MID	NW2,SM45C,-,-,-,-,DRAWER	1	
19	DA97-06707A	ASSY VALVE WATER-HOSE	NW2,DISP,-,-,-	1	

EXPLODED VIEW & PARTS LIST

■ Parts List of Cabinet (RB195AC)

NO	CODE-NO	PART NAME	SPEC	QUANTITY	REMARK
1	DA63-02520A	COVER HINGE-UPP L	W2-PJT(05),ABS,-,-,-,-,-,SC-00477R,HG-0760H	1	
2	DA97-06705A	ASSY COVER HINGE-UPP R	NW2,ABS,-,-,-,-,-,Creamy STS(SC-07009R),-	1	RO045
2-1	DA63-04441A	COVER HINGE-UPP R	NW2-PJT,ABS,T2.0,-,-,-,-,Creamy STS(SC-07009R),-	1	RO045
2-2	DA34-00043C	SWITCH REED-ASS'Y	200VDC,1.5A,-	1	RO150
3	DA97-06716A	ASSY HINGE UPP-R	NW2,T3.0,-,-,-,-,-	1	RO042
3-1	DA61-04476A	HINGE-UPP R	NW2-PJT,SHP1,T3.0,-,-,-,-,-	1	RO128
3-2	DA63-02527A	SHIM HINGE-UPP	W2-PJT(05),HIPS,T1.0,-,-,-,-	1	RO067
4	DA97-06701A	ASSY HINGE-MID	NW2,-,-,-,-,-,-	1	RO039
4-1	6009-001548	SCREW-SPECIAL	FH,HEX,-,M6,L20,ZPC3(WHT),SWRCH18(A),-,-	2	RQ747
4-2	DA61-04433C	HINGE-MID R	NW2,SHP1,T4.5,-,-,Ni-Cr Plated,-,SWING Type	1	RO123
4-3	DA61-04433C	SHIM-HINGE MID	AW-PJT,RD-PVC,T1.0,-,-,-,-	1	RO123
4-4	DA66-00610A	SHAFT-HINGE	NW2,MSWR10,-,-,-,-,-	1	RC012
5	DA97-00408E	ASSY COVER-COMP	W2-05,-,T0.35,-,-,-,-,-	1	
6	MK162DL1U/E09	COMPRESSOR	6.15CC,115/127V~60HZ,RSCR	1	RH002
7	DA63-02017A	GROMMET COMP	QUEEN,EPDM,-,-,-,-,-,BLACK,-	4	RH015
8	DA60-20008A	BOLT-HEX	S25C,M6,-,-,L42.6,WHITE,-,ZPC	4	RW074
9	DA63-01866A	COVER RELAY	NORYL,T2.0,-,-,-,SSEC,BLACK,HOOK	1	RH004
10	DA97-04049A	ASSY CAP-DRAIN	EPEL,ASSY,-,-,L224.5,-,SOFT-PVC	2	RZ110
11	DA62-01514A	DRYER	C1220T,OD18.70,L114,-,-,-	1	RH014
12	DA97-06698A	ASSY TRAY-DRAIN WATER	NW2,-,-,-,-,-	1	RH003
12-1	DA62-00954A	SEAL-SUB COND	W2-05,FOAM-PE,-,T7,-,-,-	1	RH030
12-2	DA63-04466A	TRAY DRAIN-WATER	NW2,PP,-,-,-,-,NTR,-	1	RH003
12-3	DA97-02791B	ASSY PIPE-SUB COND	NW2-PJT,-	1	RW005
12-4	DA97-03145L	ASSY SUPPORT-CIRCUIT MOTOR	AW2-PJT,-,-,-,-,1550RPM,2.7W	1	RO132
12-4-1	DA31-00146B	MOTOR BLDC	DRCP5030LA,1560,-,DC12V,230mA,-,-,2.7W,ATOP	1	RI089
12-4-2	DA61-02349B	SUPPORT-CIRCUIT MOTOR	NEXT,ABS,-,-,-,NTR,-	1	RF033
12-4-3	DA61-02355B	BRACKET-CIRCUIT MOTOR	ABS,NEXT,-,-,-,NTR,-	1	RH039
12-4-4	DA63-01146A	GROMMET-MOTOR,REAR	A-TOP,NBR,-,-,-,ID6.5,OD42,BLK,BLDC	1	RO138
12-4-5	DA63-40167A	GROMMET-COVER CHIL	SILICON,T3.0,-,L16,-,-,BLACK,-	1	RI087
12-4-6	DA96-00042A	ASSY-HARNESS MOTOR	A-TOP UL(MOTOR),C-FAN,350MM	1	RI133
12-5	DA31-00010D	FAN-ASS'Y	ET,ZIPEL,ASSY,-,UNIT,_150	1	RI085
13	DA97-06815A	ASSY CHASSIS COMP	NW2,T1.2,-,-,-,-	1	
13-1	DA60-90146A	PIN-CASTER	MSWR10,OD6.0,L40,ZPC2,SR-289-4	2	RH019
13-2	DA61-40126B	CASTER-REAR	REF-ALL,PP,-,PI 44,NTR,W22,-	2	RH011
13-3	DA64-02694A	CHASSIS COMP	NW2,SBHG1,T1.2,-,-,-,-	1	RO002
13-4	DA71-50240A	BRACKET-CABI	ALL,SBHG1,T1.6,-,-,-,-	1	
14	DA97-06673A	ASSY COVER LEG FRONT	NW2,-,-,-,-,-,-,CREAMY STS,-	1	
14-1	DA63-04462A	COVER LEG-FRONT	NW2,PP,-,-,-,-,-,CREAMY STS,-	1	RO003
14-2	DA67-02071A	CAP LEG FRONT	NW2,PP,-,-,-,CREAMY STS,-	2	
15	DA97-06688A	ASSY SUPPORT-FOOT FRONT	NW2,-,-,-,-,-	1	
15-1	DA61-00805D	FOOT-FRONT	AW2-PJT,PP+MSWR10,-,BLACK,-,-,-	1	RO001
15-2	DA61-04490A	SUPPORT-FOOT FRONT	NW2,SHP1,T4.0,-,-,-,-	1	RO158
16	DA61-00176A	CASTER-FRONT	PP,-,OD40,NTR,-,-	2	RH009
17	DA60-90124A	RIVET	MSWR10,OD6.0,-,-,L56,-,-,-	2	RH012
18	DA97-06706A	ASSY HINGE LOW	NW2,-,-,-,-,-,-	1	RO036
18-1	DA61-00805D	FOOT-FRONT	AW2-PJT,PP+MSWR10,-,BLACK,-,-,-	1	RO001
18-2	DA61-04488A	HINGE-LOW	NW2,SHP1,T4.0,-,-,-,-,-	1	RO036
18-3	DA66-00611A	SHAFT HINGE-MID	NW2,SM45C,-,-,-,-,DRAWER	1	
19	DA97-06707A	ASSY VALVE WATER-HOSE	NW2,DISP,-,-,-	1	

NW-미주향-AC 2010.6.83:48PM 페이지87 in

5-4) Disassembly of Freezer Door

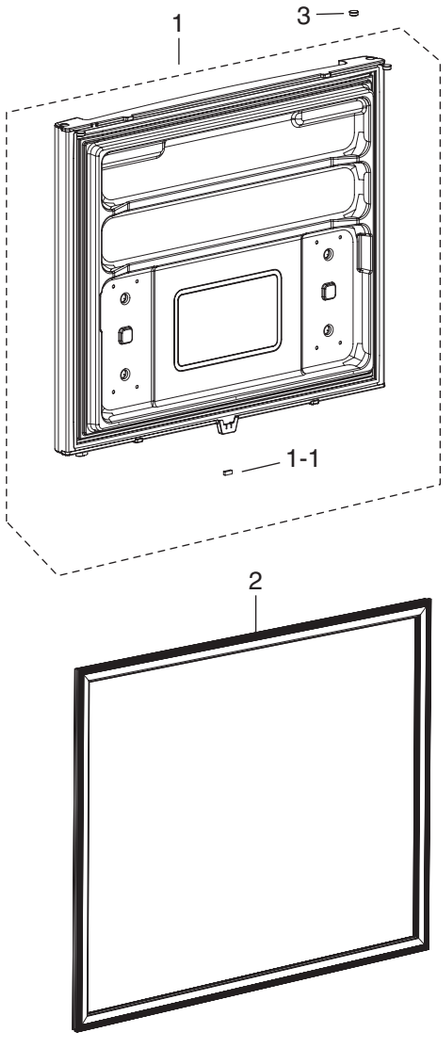

EXPLODED VIEW & PARTS LIST

■ Parts List of Freezer Door (RB215AC/RB195AC)

NO	CODE-NO	PART NAME	SPEC	QUANTITY	REMARK
1	DA91-02761A	ASSY DOOR FOAM FRE	NW2,VERSAILLES STS,-,-,SWING,-	1	
1	DA91-02761D	ASSY DOOR FOAM FRE	NW2,PLATINUM INOX,-,-,-,SWING	1	
1	DA91-02761H	ASSY DOOR FOAM FRE(SNOW WHITE)	NW2,Snow White,SWING	1	
1	DA91-02761B	ASSY DOOR FOAM FRE(BLACK)	NW2,I-BLACK,-,-,-,SWING	1	
1-1	DA61-03769A	MAGNET	HERMES,-,5x7x18,-,-,1200Gauss	1	
2	DA97-06694A	ASSY-GASKET DOOR FRE(GRAY)	NW2,SF-PVC,-,-	1	
2	DA97-06694B	ASSY-GASKET DOOR FRE(BLACK)	NW2,BLACK,-,-	1	
3	DA67-02076A	CAP-HINGE HOLE(CREAMY STS)	NW2,ABS,CREAMY STS,SC-07009R	1	
3	DA67-02076B	CAP-HINGE HOLE(I BLACK)	NW2,ABS,I-BLACK,SC-07009R	1	
3	DA67-02076C	CAP-HINGE HOLE(SNOW WHITE)	NW2,ABS,SNOW WHITE,SC-07009R	1	

EXPLODED VIEW & PARTS LIST

5-5) Disassembly of Refrigerator Door

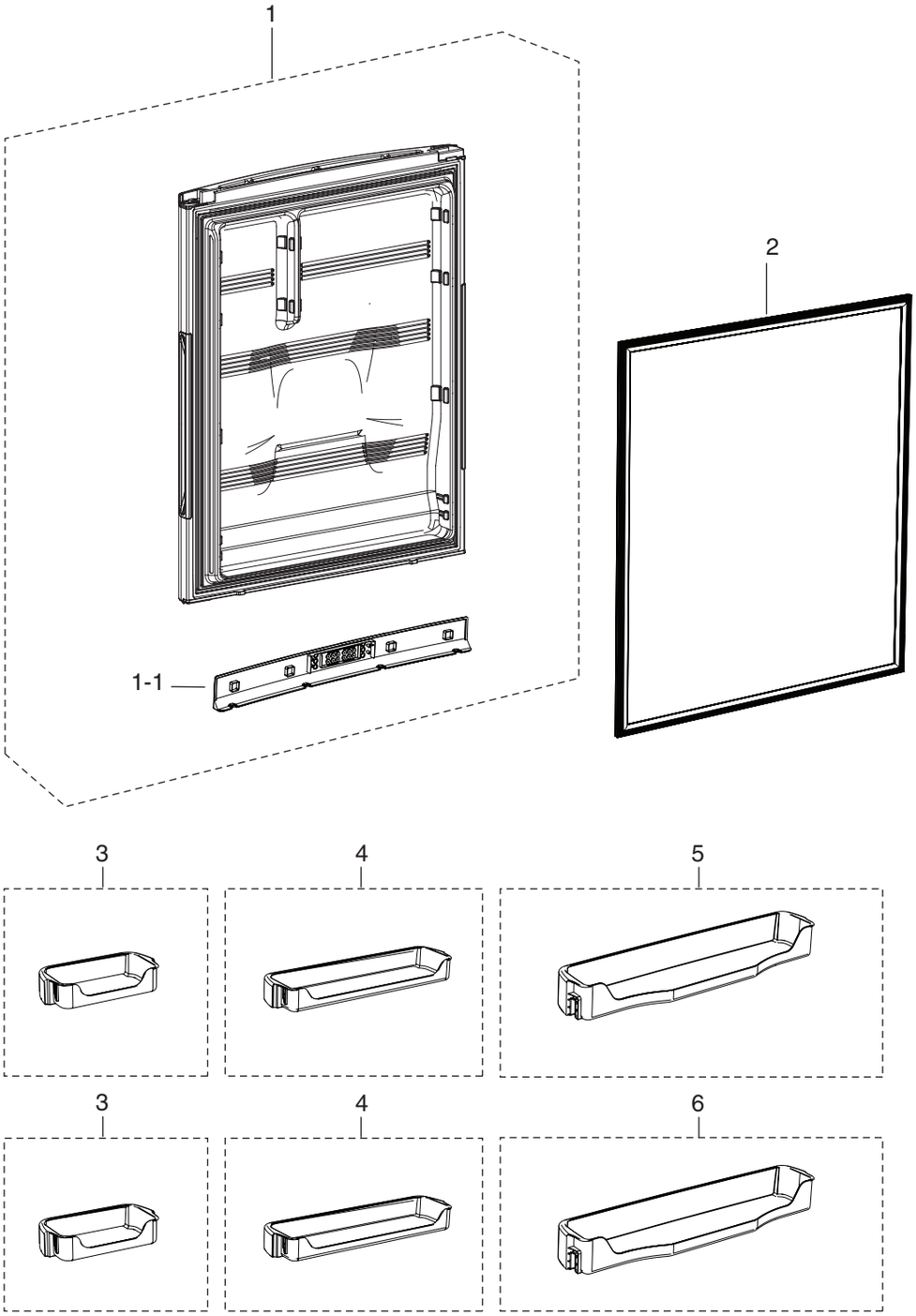

EXPLODED VIEW & PARTS LIST

■ Parts List of Refrigerator Door(RB215AC/RB195AC)

NO	CODE-NO	PART NAME	SPEC	QUANTITY	REMARK
1	DA91-02953D	ASSY DOOR-FOAM REF	NW2,Versailles STS (DAC-GR0803RS),RECESS HANDLE	1	RE001
1	DA91-02953F	ASSY DOOR-FOAM REF	NW2,PLATINUM INOX (DAC-GR0701TV),RECESS HANDLE	1	RE001
1	DA91-02953E	ASSY DOOR-FOAM REF	NW2,Empire Black (SC-04119TP),RECESS HANDLE	1	RE001
1	DA91-02953J	ASSY DOOR-FOAM REF	NW2,SNOW WHITE (SC-97527TP),PCM,RECESS HANDLE	1	RE001
1-1	DA97-08872A	ASSY COVER CONTROL-FRONT	NW2-PJT,Creamy STS(SC-07009R)	1	RE014
1-1	DA97-08872B	ASSY COVER-CONTROL FRONT	NW2-PJT,I-BLACK(SC-00477R),BASIC,˚F & ICE OFF	1	RE014
1-1	DA97-08872C	ASSY COVER-CONTROL FRONT	NW2-PJT,SNOW WHITE(SC-97527R),BASIC,˚F & ICE OFF	1	RE014
2	DA97-06693A	ASSY-GASKET DOOR REF	NW2,SF-PVC,-,-	1	RE016
2	DA97-06693B	ASSY-GASKET DOOR REF	NW2,BLACK,-,-	1	RE016
3	DA63-00926D	GUARD-REF UPP L	W2-PJT,HIPS(HG-1760),-,-,-,COOL-WHITE,SC-02740R	2	
4	DA63-00927D	GUARD-REF UPP R	W2-PJT,HIPS(HG-1760),-,-,-,COOL-WHITE,SC-02740R	2	
5	DA63-01262B	GUARD-REF MID	W2-05,HIPS,-,-,-,SC-02740R,COOL-WHT	1	
6	DA63-01263C	GUARD-REF LOW	W2-05,HIPS,-,-,-,SC-02740R,COOL-WHT	1	

6. PCB DIAGRAM

6-1) PCB L ayout with part position (Main Board)

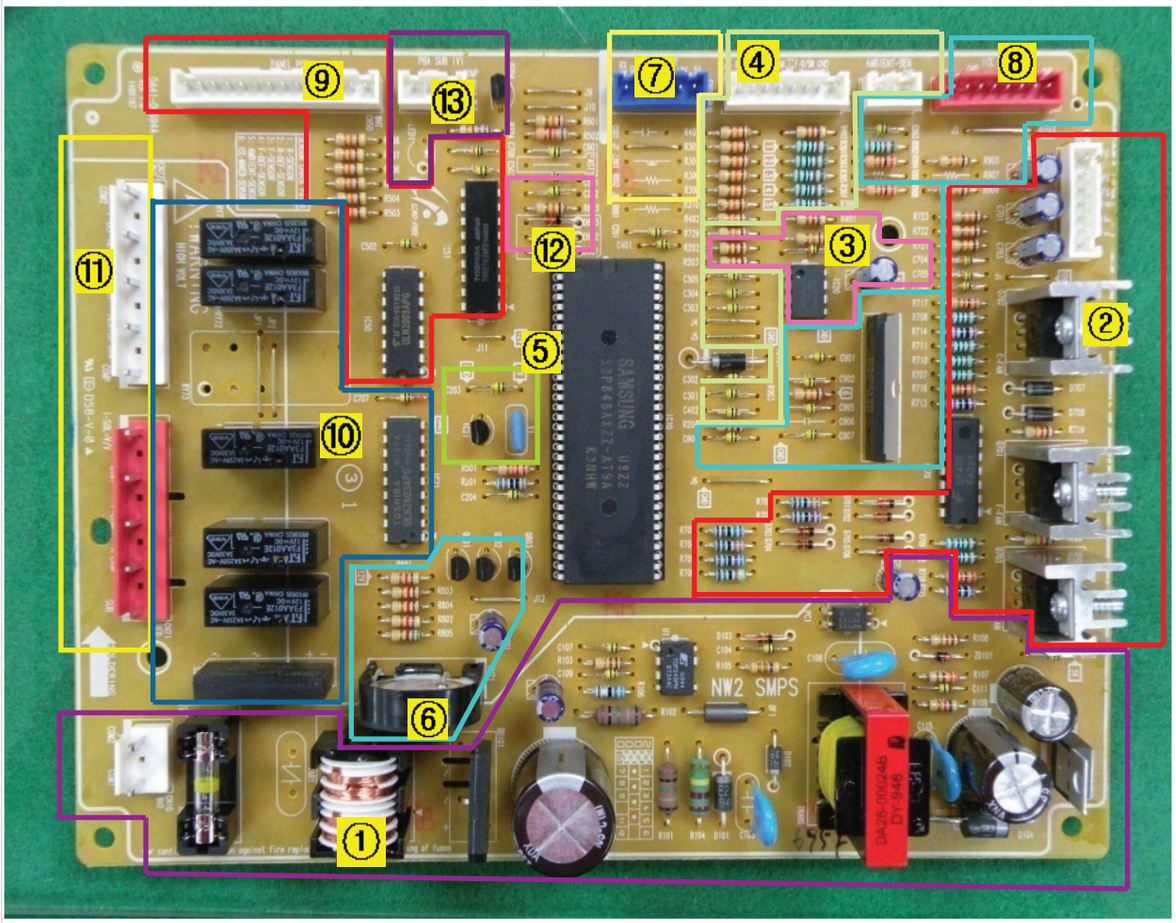

1. DC12V,5V, & GND are supplied from SMPS PCB.
2. FAN MOTOR driving part : Supply the power from 8.3V~12V to motor according to the motor type(F,R,C,ICE).
3. EEPROM : Save and record every kinds of data.
4. Transmit inputted signals from every sensor into MICOM after eliminate the noise.
5. Departure part : Generate the CLOCK which needs to conrol MICOM program RESET control circuit part : Initialize the program by sensing power ON/OFF.
6. BUZZER Circuit
7. PLC Input / Output

- PLC (Power Line communication)

* Option(PLC module is not inserted unless specified occasion.)

8. Operate ICE-MAKER, supply power to MOTOR, and sense the variation of switch.
9. Display driving part : Display LED & detect KEY state.
10. Relay part which controls AC load : Operate by receiving the driving signals of MICOM through Sink IC. (RY75/RY76's Relay to LED Lamp operation use.(DC12V)
11. Connector part : Connect AC load.
12. DIODE option setting part : Set the option
13. Inverter Control part

PCB DIAGRAM

6-2) Connector Layout with part position (Main Board)

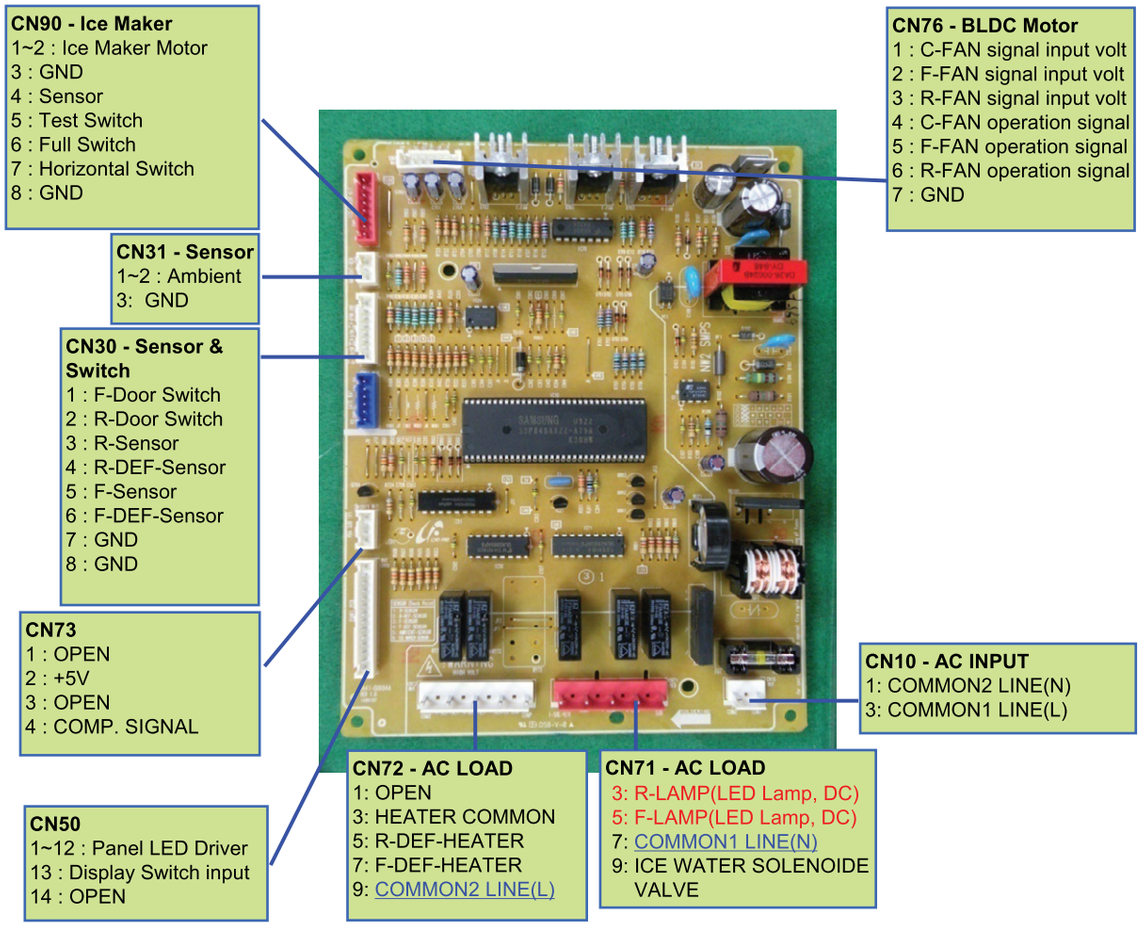

NW-미주향-AC 2010.6.83:48PM 페이지93 in

7. Wiring Diagram

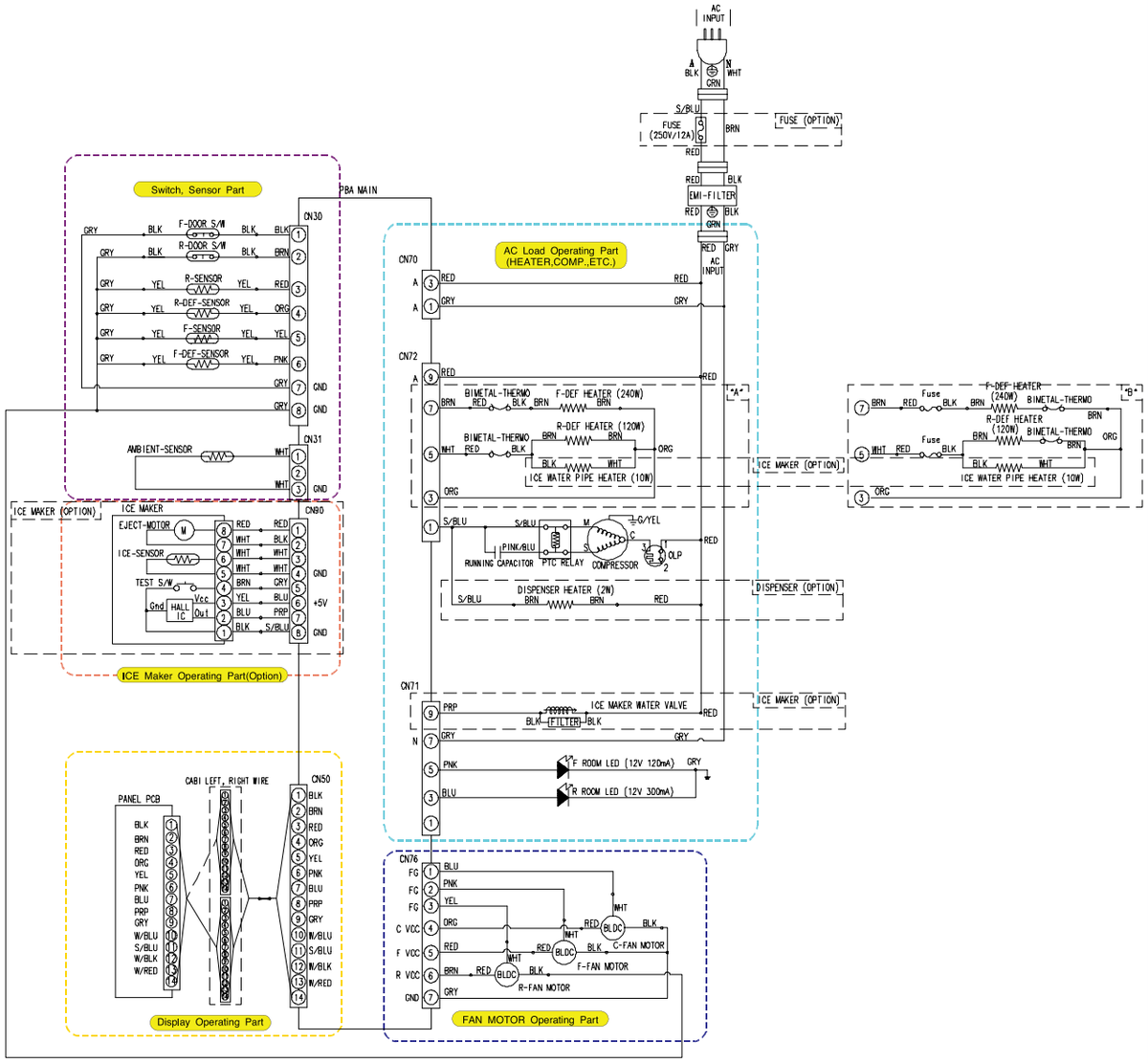

8. Schematic Diagram

8-1) Refrigerator Block Diagram

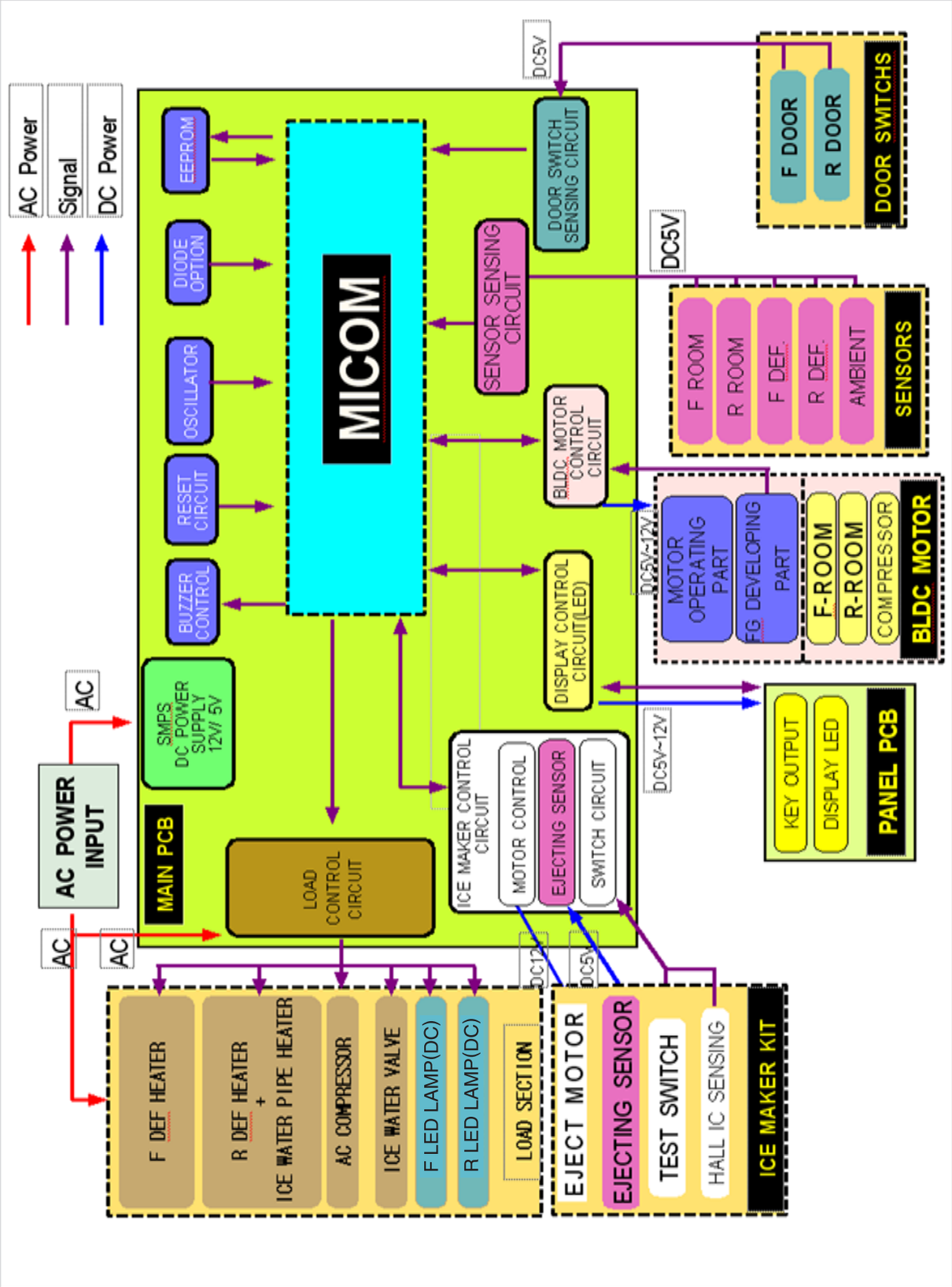

NW-미주향-AC 2010.6.83:48PM 페이지95 in

8-2) Power and Signal Block Diagram

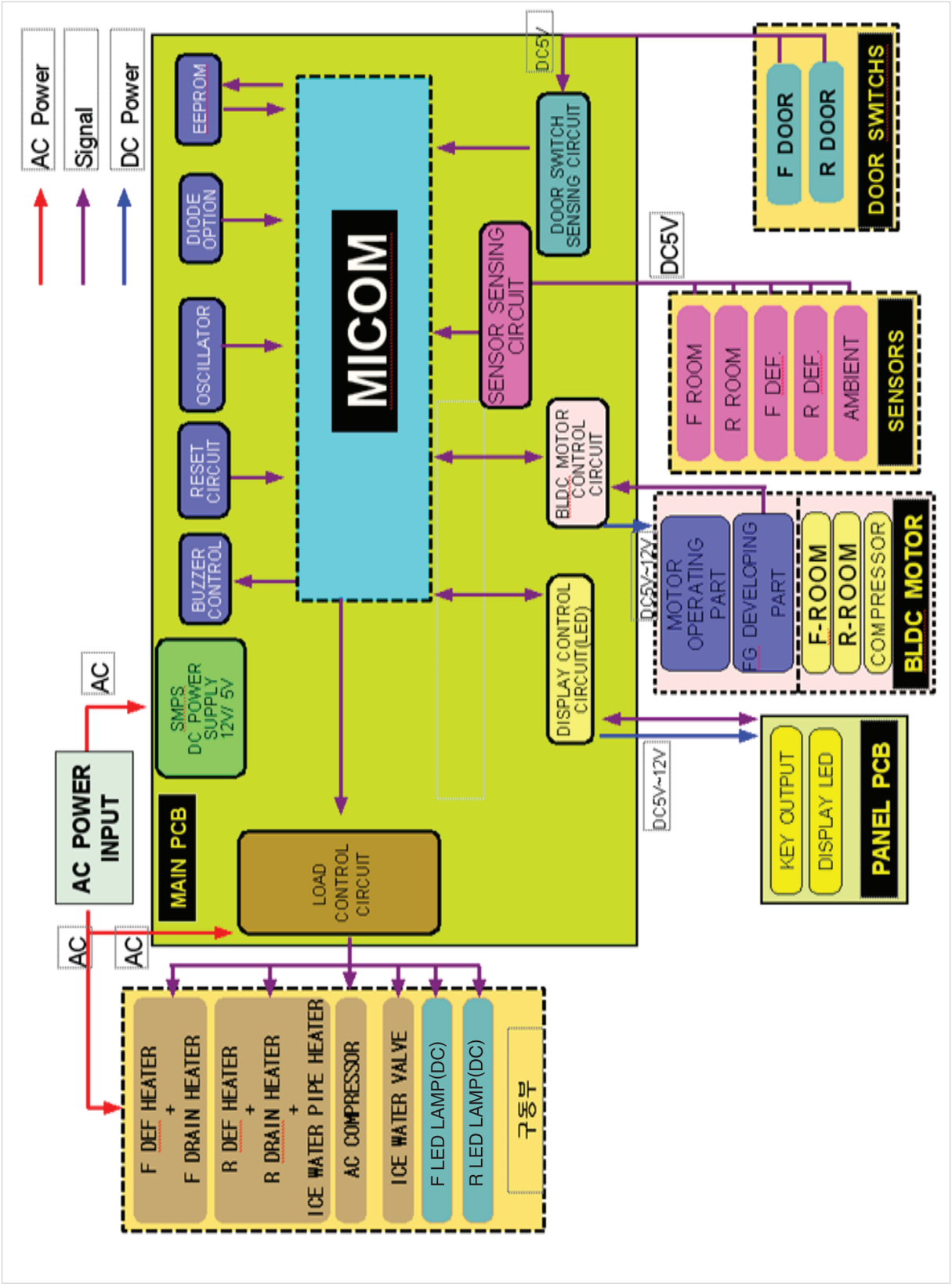

8-3) Main

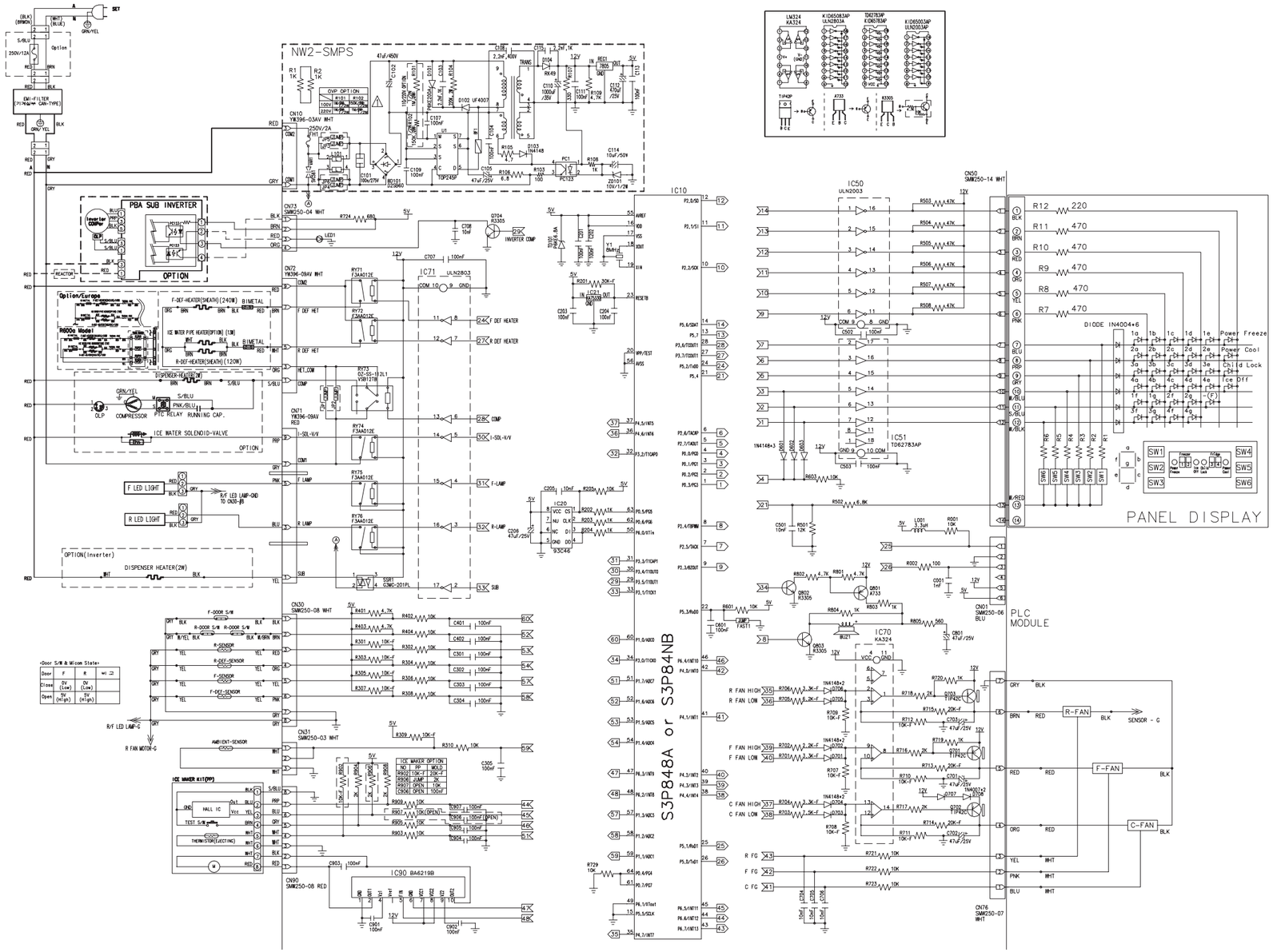
NW2-SMPS
PBA SUB INVERTER
OPTION
PANEL DISPLAY
PLC MODULE
S3P848A or S3P84NB
IC10
IC50
IC51
IC70
IC71
IC90
IC20
CN10
CN30
CN31
CN50
CN71
CN72
CN73
CN76
CN90
F LED LIGHT
R LED LIGHT
COMPRESSOR
ICE WATER SOLENOID-VALVE
DISPENSER HEATER(2W)
R-FAN
F-FAN
C-FAN
SENSOR - G

NW-미주향-AC 2010.6.83:48PM 페이지98 in

272, Oseon-Dong, Gwangsan-Gu,
Gwangju-City, Korea, 506-253
TEL : 82-62-950-6193, 6896
FAX : 82-62-950-6829

– This Service Manual is a property of Samsung Electronics Co., Ltd.
Any unauthorized use of Manual can be punished under applicable
International or domestic law.

© Samsung Electronics Co., Ltd.
Refrigerator Division 2010.05
Printed in Korea